# Contents

## Warranty certificate

| **Vehicle data** |
|---|
| Model: |
| Car manufacturer/type of engine: |
| Serial number: |
| Delivery date: |
| Initial registration: |
| Purchased from company: |
| Expiry of the warranty period: |
| Key number: |
| Chassis number: |
| |
| **Customer address:** |
| Surname, Christian name: |
| Street, house number: |
| Postal code, town: |
| |
| Dealer's stamp and signature |

We reserve the right to alter the construction, equipment and the scope of delivery. Special equipment is also listed that is not included in the standard scope of delivery. The descriptions and illustrations in this brochure do not relate to a particular version. For all details, only the respective equipment list is valid.

## Please read this instruction manual completely before using the vehicle for the first time!

Always keep this instruction manual in the vehicle. Also inform all other users of the safety regulations.

▶ The non-observance of this symbol can lead to personal injury.

▷ The non-observance of this symbol can lead to damage being caused to, or inside the vehicle.

▷ This symbol indicates recommendations or special aspects.

▷ This symbol indicates actions which lead to environmental awareness.

With your motorhome you will receive a file with the following vehicle manuals and documents:

- Operating and installation instructions of various appliances
- Complete set of documents from the chassis manufacturer
- Test certificate for the gas system in accordance with German regulations

**This instruction manual contains sections which describe model-specific equipment or special equipment. These sections are not specially marked. It may be that your vehicle has not been fitted with this special equipment. In some cases, the actual equipment of your vehicle may therefore be different from that shown in some illustrations and descriptions.**

However, your vehicle may be fitted with other special equipment not described in this instruction manual.

Special equipment is described when an explanation is required.

Adhere to the instruction manuals which are separately enclosed.

▷ The details "right", "left", "front" and "rear" always refer to the vehicle in direction of travel.

▷ All dimensions and weight details are "approximate".

▷ The metric specifications are binding for physical dimensions.

Should the vehicle be subjected to damage due to a failure to follow the instructions in this instruction manual, then the warranty claim is deemed invalid.

Our vehicles are subjected to continuous development. Please understand that we reserve the right to alter the form, equipment and technology. Therefore, no claims can be made against the manufacturer as a result of the contents of this instruction manual. The equipment which was known and included at the time of going to press is described.

## 2.1 General

The vehicle is constructed in accordance with the latest technology and the recognised safety regulations. Nevertheless, personal injury may result and the vehicle may be damaged if the safety instructions in this instruction manual are not followed.

Before using the vehicle for the first time, equip it with the legally prescribed equipment (e.g. first aid kit, warning vest, hazard warning triangle etc.). Observe the relevant equipment regulations when travelling abroad.

Only use the vehicle in a technically impeccable condition. Follow the instructions in the instruction manual.

Malfunctions which impair the safety of persons or the vehicle should be immediately remedied by qualified personnel. To avoid further damages, observe the duty to avert, minimise or mitigate loss for the user during faults.

Have the vehicle's braking and gas systems inspected and repaired by an authorised specialist workshop only.

Alterations to the body are only to be carried out with the authorisation of the manufacturer.

The vehicle is designed for the exclusive transport of persons. Luggage and accessories may only be transported up to the maximum permissible gross weight.

Observe the test and inspection periods stipulated by the manufacturer.

## 2.2 Environmental tips

- ▷ Be considerate of the environment.
- ▷ Remember that: All kinds of waste water and household waste are not to be disposed of in drains or in the open countryside.
- ▷ On board, collect waste water only in the waste water tank or – if necessary – in other containers designed for that purpose.
- ▷ Only empty the waste water tank and sewage tank at disposal stations at the camping or caravan sites, which are especially provided for this purpose. When stopping in towns and communities, observe the instructions at caravan sites or ask where there are disposal stations.
- ▷ Empty waste water tank as often as possible, even when it is not completely full (hygiene).

  If possible, flush out waste water tank and, if necessary, drainage pipe with fresh water every time it is emptied.
- ▷ Never allow the sewage tank to become too full. Empty the sewage tank frequently, at the latest as soon as the level indicator lights up.
- ▷ Separate household waste according to glass, tin cans, plastic and wet waste also when on a journey. Enquire at the town or community authority about disposal points. Household waste is not to be disposed of in waste paper baskets which are situated at car parks.
- ▷ Empty waste bins as often as possible into the containers provided for this purpose. This helps to avoid unpleasant smells and an accumulation of rubbish on board.
- ▷ When parked, do not allow the engine to run more than necessary. When running idle, a cold engine releases more contaminants than usual. The running temperature of the engine is achieved more quickly whilst the vehicle is in motion.

- ▷ Use an environmentally-friendly WC chemical agent for the WC which can also be biologically degraded and only use small doses.
- ▷ When staying in towns and communities for long periods, search for parking areas which are specially reserved for motorhomes. Enquire at the town or community authority about parking spaces.
- ▷ Always leave the parking places in a clean condition.

## Chapter overview

This chapter contains important safety instructions. The safety instructions are for the protection of persons and property.

The instructions address the following topics:

- fire prevention and what to do in case of fire
- general care of the vehicle
- road safety of the vehicle
- towing
- gas system of the vehicle
- electrical system of the vehicle
- water system of the vehicle

## 3.1 Fire prevention

### 3.1.1 Avoidance of fire risks

- ▶ Never leave children in the vehicle unattended.
- ▶ Keep flammable materials clear of heating and cooking appliances.
- ▶ Never use portable heating or cooking appliances.
- ▶ Only authorised qualified personnel may make changes to the electrical system, gas system or appliances.

### 3.1.2 Fire-fighting

- ▶ Always carry a dry powder fire extinguisher in the vehicle. The fire extinguisher must be approved, tested and close at hand.
- ▶ Have the fire extinguisher tested at regular intervals by authorised qualified personnel. Observe the date of testing.
- ▶ Always keep a fire blanket near the cooker.

### 3.1.3 In case of fire

- ▶ Evacuate all passengers.
- ▶ Cut off the electrical power supply and disconnect from the mains.
- ▶ Close regulator tap on the gas bottle.
- ▶ Sound the alarm and call the fire brigade.
- ▶ Fight the fire if this is possible without risk.

- ▷ Acquaint yourself with the position and operation of the emergency exits.
- ▷ Keep escape routes clear.
- ▷ Observe the fire extinguisher instructions for use.

All windows and doors which meet the following requirements are considered as emergency exits:

- Open to the outside or can be shifted in horizontal direction
- Opening angle at least 70°
- Minimum diameter of clearance = 450 mm
- Maximum distance from the vehicle floor = 950 mm

## 3.2 General

- ▶ The oxygen in the vehicle interior is used up by breathing and the use of gas operated appliances. That is why the used air must be replaced permanently. For this purpose, forced ventilation options (e.g. skylights with forced ventilation, mushroom-shaped vents or floor vents) are fitted to the vehicle. Never cover or block forced ventilations from the inside or outside with objects such as e.g. a winter mat. Keep forced ventilations clear of snow and leaves. There is a danger of suffocation due to increased $CO_2$ levels.
- ▶ Observe the headroom of the doors.

- ▷ As far as the fitted appliances (heater, cooker, refrigerator, etc.) and the base vehicle (engine, brakes, etc.) are concerned, the instruction manuals are authoritative. It is imperative that they be observed.
- ▷ Fitting accessories or special equipment can alter the dimensions, weight and road behaviour of the vehicle. Some of the parts must be entered in the vehicle papers.
- ▷ Only use wheel rims and tyres which are approved for the vehicle. Information concerning the size of the approved wheel rims and tyres is included in the vehicle documents or can be obtained from authorised dealers and service centres.
- ▷ Firmly apply the handbrake when parking the vehicle.
- ▷ If the maximum permissible gross weight of the vehicle exceeds 4 tonnes, a wheel chock must be used when parking on gradients. The wheel chock is provided as standard for vehicles with a maximum permissible gross weight exceeding 4 tonnes.

- ▷ When leaving the vehicle, it is imperative that all doors and windows are closed. If the vehicle is equipped with external flaps, these must also be closed.
- ▷ Always carry the legally prescribed equipment (e.g. first aid kit, warning vest, hazard warning triangle etc.) with you. The regulations of the host country apply when travelling abroad.
- ▷ The vehicle may only be driven by drivers who hold a driving licence which is valid for the respective vehicle class.
- ▷ When selling the vehicle, hand over all instruction manuals for the vehicle and the fitted appliances.

## 3.3 Road safety

- ▶ Before commencing the journey, carry out a functional check of indicating and lighting equipment, the steering and the brakes.
- ▶ If the vehicle has been stationary for a long period (approx. 10 months) have the braking and gas systems checked by an authorised specialist workshop.
- ▶ Before commencing the journey and after short interruptions of the journey, ensure that the entrance step is completely retracted.
- ▶ Before commencing the journey, open, lock and secure the shades situated on the windscreen and on the driver's and front passenger's windows.

- ▶ Before commencing the journey, rotate all swivel seats in the direction of travel and lock in position. During the journey, the swivel seats must remain locked in place in the direction of travel.
- ▶ Carefully store all moving parts and all loose objects before starting your journey.
- ▶ Before commencing the journey, remove the loose sink cover and stow it safely away in the kitchen unit or wardrobe.
- ▶ Before commencing the journey, secure the television.
- ▶ During the journey, persons are only to sit on the permitted seats (see chapter 5). The authorised number of seats is stipulated in the vehicle documents.
- ▶ Seat belts must be worn by all passengers.
- ▶ Fasten your seat belts before the beginning of the journey and keep them fastened during the journey.
- ▶ When travelling, secure children under 13 years of age that are smaller than 150 cm, with a suitable and officially approved child restraint system.
- ▶ Only attach the child restraint system to seats that are specified for this purpose.
- ▶ The base vehicle is a commercial vehicle (small truck). Adjust your driving technique accordingly.
- ▶ In case of underpasses, tunnels or similar obstacles, note the total height of the vehicle (including the roof load).
- ▶ In winter, the roof must be free of snow and ice before commencing the journey.
- ▶ Check tyre pressure before a journey or every 2 weeks. Wrong tyre pressure causes excessive wear and can lead to damage or even to tyre burst. You can lose control of the vehicle (see section 14.5).
- ▶ Do not operate the heater at petrol stations. Danger of explosion!
- ▶ Do not operate the heater in closed spaces. Danger of suffocation!

- ▷ Before commencing the journey, distribute the payload evenly within the vehicle (see chapter 4).
- ▷ When loading the vehicle and when taking a rest from driving, in order to load luggage or food, for example, observe the maximum permissible gross weight and axle loads (refer to vehicle documents).
- ▷ Before commencing the journey, close and secure all drawers and flaps.
- ▷ Before commencing the journey, close windows and skylights.
- ▷ Before commencing the journey, close all external flaps (if present) and lock the flap locks.
- ▷ Before commencing the journey, remove external supports.
- ▷ Before commencing the journey, put the antenna in park position.
- ▷ During the initial journey and each time after changing a wheel, re-tighten the wheel bolts/wheel nuts after 50 km (30 miles). Subsequently inspect them at regular intervals in order to ensure that they are firmly seated.

- ▷ Tyres may not be older than 6 years as the material becomes brittle over time (see chapter 14).
- ▷ When using snow chains, the tyres, wheel suspension and steering are subjected to an additional load. When using snow chains, drive slowly (maximum speed 50 km/h) and only on streets which are completely covered with snow. Otherwise the vehicle could be damaged.

## 3.4 Towing

- ▶ Care is to be taken when connecting and detaching a trailer. Risk of accident and injury!
- ▶ No persons are to be between the motorhome and the trailer during positioning for connecting and detaching.

## 3.5 Gas system

### 3.5.1 General instructions

- ▶ The operator of the gas system is responsible for the performance of recurring inspections and for complying with the maintenance intervals.
- ▶ Before commencing the journey, when leaving the vehicle or when gas equipment is not in use, close all gas isolator taps and the main isolator tap on the gas bottle.
- ▶ All gas-operated devices (heater, cooker, oven, grill, refrigerator - depending on the equipment) must be switched off for refuelling, on ferries or in the garage. Danger of explosion!
- ▶ Do not use gas-operated devices in closed spaces (e.g. garages). Danger of poisoning and suffocation!
- ▶ Only have the gas system maintained, repaired or altered by an authorised specialist workshop.
- ▶ Have the gas system checked by an authorised specialist workshop according to the national regulations before commissioning. This also applies for not registered vehicles. For modifications to the gas system have the gas system immediately checked by an authorised specialist workshop.
- ▶ The gas pressure regulator, the gas tubes, and the exhaust gas pipes must also be inspected. The gas pressure regulator and the gas tubes must be replaced observing the nationally defined deadlines (the latest after 10 years). The vehicle owner is responsible for seeing that this is carried out.
- ▶ In case of a defect of the gas system (gas odour, high gas consumption) there is danger of explosion! Close regulator tap on the gas bottle immediately. Open doors and windows and ventilate well.
- ▶ If the gas system is defective: Do not smoke; do not ignite any open flames, and do not operate electric switches (light switches etc.). Check the tightness of gas-conducting parts and lines with leakage search spray. Do not check with an open flame.
- ▶ Only the stipulated devices may be connected to internal connections. Do not operate any device outside the vehicle if it is connected to an internal connector.
- ▶ Before using the cooker make sure that there is sufficient ventilation. Open a window or the skylight.

- Do not use the gas cooker for heating purposes.
- If there are several gas devices, each gas device must have its own gas isolator tap. If individual gas devices are not in use, close the respective gas isolator tap.
- Ignition safety valves must close within 1 minute after the gas flame has extinguished. A clicking sound is audible. Check function from time to time.
- The built-in gas devices are exclusively meant for use with propane or butane gas or a mixture of both. The gas pressure regulator as well as all built-in gas devices are designed for a gas pressure of 30 mbar.
- Propane gas is capable of gasification up to -42 °C, whereas butane gas gasifies at 0 °C. Below these temperatures no gas pressure is available. Butane gas is unsuitable for use in winter.
- Due to its function and construction, the gas bottle compartment is a space which is open to the exterior. Never cover or block up the standard forced ventilations. Otherwise gas that is emitted can not be diverted to the outside.
- The gas bottle compartment must not be used as storage space.
- Secure the gas bottle compartment against unauthorised access. To do this, lock the compartment.
- The regulator tap on the gas bottle must be accessible.
- Only connect gas-operated devices (e.g. gas grill) which have been designed for a gas pressure of 30 mbar.
- The exhaust gas pipe must be fitted tightly to the heating system and to the vent and must be sealed. The exhaust gas pipe must not show any evidence of damage.
- Exhaust fumes must be able to escape into the atmosphere unhindered and fresh air must be able to enter unhindered. For this reason, keep the exhaust pipe and intake openings clean and unobstructed (e.g. free from snow and ice). For this reason, no snow walls or aprons may lie against the vehicle.

### 3.5.2 Gas bottles

- Handle full or emptied gas bottles outside the vehicle only with closed regulator tap and attached protective cap.
- Gas bottles are only to be transported within the designated gas bottle compartment.
- Place the gas bottles in vertical position in the gas bottle compartment.
- Fasten the gas bottles so that they are unable to turn or tilt.
- Connect the gas tube to the gas bottle without tension.
- If the gas bottles are not connected to the gas tube, always place the protective cap on top.
- Close the regulator tap on the gas bottle before the gas pressure regulator or gas tube are removed from the gas bottle.
- Depending on the connection, unscrew the gas tube from the gas bottle and screw it on the gas bottle again by hand or using an suitable special spanner. The screw connection on the gas bottle generally has a left-hand thread. **Do not** tighten too firmly.

- ▶ Only use special gas pressure regulators with a safety valve designed for vehicle use. Other gas pressure regulators are not permitted and cannot meet the demanding requirements.
- ▶ Use the gas pressure regulator defroster if the temperature falls below 5 °C.
- ▶ Use only 11 kg or 5 kg gas bottles. Camping gas bottles with built-in check valve (blue bottle with max. 2.5 or 3 kg content) are can be used in exceptional cases with a safety valve.
- ▶ Use the shortest possible tube lengths (150 cm max.) for external gas bottles.
- ▶ Never block the floor ventilation openings below the gas bottles.

## 3.6 Electrical system

- ▶ Only allow qualified personnel to work on the electrical system.
- ▶ Prior to carrying out work on the electrical system, switch off all devices and lights, disconnect the battery and disconnect the vehicle from the mains.
- ▶ Only use original fuses with the stipulated values.
- ▶ Only replace defective fuses when the cause of the defect is known and has been remedied.
- ▶ Never bridge or repair fuses.

## 3.7 Water system

- ▶ Water left standing in the water tank or in the water pipes becomes undrinkable after a short period. Therefore, before each use of the vehicle, thoroughly clean the water pipes and the water tank. After each use of the vehicle completely empty the water tank and the water pipes.
- ▶ In the case of lay-ups lasting more than a week disinfect the water system before using the vehicle (see chapter 12).

▷ If the vehicle is not used for several days or if it is not heated when there is a risk of frost, empty the entire water system. Make sure that the 12 V power supply on the panel is switched off. Otherwise, the water pump will overheat and may get damaged. Leave the water taps on in central position. Leave all drain cocks open. Frost damage to appliances, frost damage to the vehicle and deposits in water-carrying components can be avoided in this way.

## Chapter overview

This chapter contains important information which has to be noted before commencing your journey or carrying out any tasks before the journey.

The instructions address the following topics:

- initial start-up
- calculating the payload
- correct loading of the vehicle and bike rack
- towing
- retracting and extending the entrance step
- storing the television
- storing the sink cover
- using snow chains

At the end of the chapter there is a checklist which once again summarises the most important points.

## 4.1 Start-up

▷ During the initial journey and each time after changing a wheel, re-tighten the wheel bolts/wheel nuts after 50 km (30 miles). Subsequently inspect them at regular intervals in order to ensure that they are firmly seated.

The motorhome is supplied with a set of keys, consisting of keys for the base vehicle and keys for the body.

Always deposit a replacement key outside the vehicle. Make a note of the key number. Our authorised dealers and workshops can offer assistance in case of loss.

Further information in chapter 13.

## 4.2 Payload

▶ Overloading the vehicle and wrong tyre pressure can cause tyres to burst. You can lose control of the vehicle (see section 14.5).

▶ The maximum permissible gross weight and the weight including special equipment fitted at the factory (actual weight) is shown in the vehicle documents, but not the weight of the loaded vehicle (see section 4.2.1). For your own safety, we recommend that you have your loaded vehicle (with all passengers, luggage and personal objects) weighed on a public weighbridge before you set out on your journey.

▶ Adapt the speed to the payload. The stopping distance is increased if the payload is high.

▷ Do not exceed the maximum permissible gross weight (permissible total weight) stated in the vehicle documents and the maximum axle loads as a result of the payload.

▷ Built-in accessories and special equipment reduce the payload.

▷ Adhere to the axle load stated in the vehicle documents.

On loading, make sure that the payload's centre of gravity is as low as possible (directly above the floor of the vehicle). Otherwise this may affect the driving characteristics of the vehicle.

### 4.2.1 Terms

▷ Technically speaking, the term "mass" has now replaced the term "weight". However, "weight" is still the term more frequent in common use. For better understanding, "mass" is therefore only used in the following sections for fixed formulations.

**Maximum permissible gross weight in a laden condition**

The maximum permissible gross weight in a laden condition is the weight that a vehicle may never exceed.

The maximum permissible gross weight in a laden condition consists of the **actual weight** and the **payload**.

In the vehicle documents, the manufacturer has specified the maximum permissible gross weight in a laden condition.

**Actual weight**

The actual weight consists of the mass in ready-to-drive condition and the weight of the special equipment fitted at the factory.

**Mass in ready-to-drive condition**

The mass in ready-to-drive condition is the weight of the ready-to-drive standard vehicle (excluding special equipment fitted at the factory).

The mass in ready-to-drive condition is made up as follows:

- Unladen weight (mass of the empty vehicle) with factory-installed standard equipment (excluding special equipment fitted at the factory)
- Driver's weight
- Basic equipment weight

Unladen weight includes lubricants such as oils and coolants which have been filled, the on-board tool set and a fuel tank which has been filled up to 90 %.

75 kg are calculated for the weight of the driver, regardless of how much the driver really weighs.

Basic equipment includes all equipment and fluids required for safe and proper vehicle use. The weight of the basic equipment includes:

- A full fresh water system
- A gas bottle filled up to 90 %
- A full heating system
- A full toilet flushing system
- The power cables for the 240 V power supply
- The installation kit for an auxiliary battery if an auxiliary battery can be used

The waste water and sewage tanks are empty.

In the vehicle documents, the manufacturer specifies the mass in ready-to-drive condition.

**Payload**

The payload is made up as follows:

- Conventional load
- Additional equipment
- Personal equipment

▷ The vehicle's payload can be increased by reducing the actual weight. To do this, it is allowed for example to empty the fluid containers or to remove the gas bottles.

You will find explanations on the individual components of the payload in the following text.

**Conventional load**

The conventional load is the weight specified by the manufacturer for the passengers.

Conventional load means: 75 kg are calculated for every seat specified by the manufacturer, regardless of how much the passengers actually weigh. The driver's seat is already included as part of the mass in ready-to-drive condition and must **not** be calculated as part of the conventional load.

In the vehicle documents, the manufacturer specifies the number of seats.

**Additional equipment**

Additional equipment includes accessories and special equipment. Examples of additional equipment include:

- Caravan coupling
- Roof rail
- Awning
- Bike or motorcycle rack
- Satellite unit
- Microwave oven

Information about the weights of the various special equipment devices can be obtained from the manufacturer.

**Personal equipment**

Personal equipment includes all items in the vehicle that are not included in the conventional load or in the additional equipment. For example, personal equipment can include the following:

- Foodstuffs
- Crockery
- Television
- Radio
- Clothes
- Bedding
- Toys
- Books
- Toiletries

No matter where kept, personal equipment also includes:

- Animals
- Bikes
- Boats
- Surfboards
- Sports equipment

For the personal equipment, according to the applicable regulations, the manufacturer must use a minimum weight that is determined according to the following formula:

**Formula**

Minimum weight M (kg) = 10 x N + 10 x L

**Explanation**

N = maximum number of people including the driver, as stated by the manufacturer
L = total length of the vehicle in metres

### 4.2.2 Calculating the payload

- ▶ The payload calculation at the factory is partly based on all-inclusive weights. For safety reasons, the maximum permissible gross weight in a laden condition must not be exceeded.
- ▶ The maximum permissible gross weight and the weight including special equipment fitted at the factory (actual weight) is shown in the vehicle documents, but not the weight of the loaded vehicle (see section 4.2.1). For your own safety, we recommend that you have your loaded vehicle (with all passengers, luggage and personal objects) weighed on a public weighbridge before you set out on your journey.

The payload (see section 4.2.1) is the difference in weight between

- the maximum permissible gross weight in a laden condition and
- the actual weight.

**Example for calculating the payload**

| | Mass in kg to be calculated | Calculation |
|---|---|---|
| Maximum permissible gross weight according to vehicle documents | 3300 | |
| Actual weight including basic equipment according to vehicle documents | - 2720 | |
| **This results in a permissible payload of** | **580** | |
| Conventional load e.g.: 3 persons each weighing 75 kg | - 225 | |
| Additional equipment | - 40 | |
| **For the personal equipment this results in** | **= 315** | |

The calculation of the payload from the difference between the maximum permissible gross weight in laden condition and the actual weight specified by the manufacturer is however only a theoretical value.

Only if the vehicle is weighed with full tanks (fuel and water), full gas bottles and complete additional equipment on a public weighbridge, can the actual payload be determined.

To do this, proceed as follows:

- First only drive the vehicle on to the weighbridge with the front wheels and have it weighed.
- Then drive the vehicle on to the weighbridge with the back wheels and have it weighed.

The individual values give the current axle loads. These are important for the correct loading of the vehicle (see section 4.2.3). The sum of these values is the current weight of the vehicle.

The actual payload is the difference between the maximum permissible gross weight in laden condition and the weighed vehicle weight.

This can be used to determine the weight that remains for the personal equipment:

- Determine the weight of the passengers and subtract it from the value for the actual payload.

The result is the weight that is permitted for the actual load of the personal equipment.

### 4.2.3 Loading the vehicle correctly

- ▶ For safety reasons, never exceed the maximum permissible gross weight in a laden condition.
- ▶ Distribute the load evenly on the left and right sides of the vehicle.
- ▶ Distribute the load evenly on both axles. In doing so, observe the axle loads specified in the vehicle documents. Observe the permissible load-carrying capacity of the tyres (see chapter 14).
- ▶ Heavy loads behind the rear axle can reduce the load on the front axle due to the leverage effect ( ). This applies especially to long rear extensions or if there is a heavy load in the rear storage space. The release of the front axle negatively affects the driving quality, especially for front-driven vehicles.
- ▶ Store all objects in such a way that they cannot slip.
- ▶ Store heavy objects (awning, tin cans, etc.) close to the axles. Low-lying storage spaces whose doors do not open in the direction of travel are particularly suited for storing heavy objects.
- ▶ Stack light objects (laundry) in the roof storage cabinets.
- ▶ Load the bike rack with bicycles only.
- ▶ Always secure loads onto the clamping eyelets. Always use tightening straps or lashing nets for securing the load, never rubber expanders.

▷ Only load the drawers with a maximum of 15 kg.

Large storage spaces, such as the rear storage space, also have room for heavy objects. This might mean that the axle load on the rear axle is exceeded.

However, the individual axles may not be overloaded under any circumstances. That is why it is important, at which distance to the axles the load is stored.

To distribute the load correctly, you will need a scale, a tape measure, a calculator and some time.

Two simple formulas are needed to calculate the effect of the weight of the load on the axles:

**Formulas**

A x G : R = weight on the rear axle

Weight on the rear axle – G = weight on the front axle

**Explanation**

A = distance between storage space and front axle in cm
G = weight of the load in the storage space in kg
R = wheelbase of the vehicle (distance between axles) in cm

▷ Measure the external distances horizontally from the centre of the front wheel to the centre of the storage space or to the centre of the back wheel.

*Calculating axle loads:*

- Multiply the distance between storage space and front axle (A) with the weight of the load in the storage space (G) and divide the result by the wheelbase (R). The result is the weight of the load in the storage space on the rear axle. Make a note of this weight and of the storage space.
- In a second step, subtract the weight in the storage space (G) from the weight calculated beforehand. If the result is a **positive** value (example 1), this means that the load on the front axle is **reduced** by this value. If the result is a **negative** value (example 2), this means that the load on the front axle is **increased**. Make a note of this value, too.
- Calculate all storage spaces of the vehicle in the same way.
- In a last step, add all weights calculated for the rear axle to the rear axle load and add (or subtract) all weights calculated for the front axle to (from) the front axle load.
  How to determine rear axle load and front axle load is described in section 4.2.2.

If the calculated value exceeds the permissible axle load, the load must be distributed in a different way.

If the load on the front axle is too low, the grip of the tyres on the road is reduced (traction). This applies in particular to vehicles with front-wheel drive. In this case, the load must be redistributed, too.

**Example calculation**

| | | Example 1 | Example 2 |
|---|---|---|---|
| Distance to the front axle | A | (A1) 450 (cm) | (A2) 250 (cm) |
| Weight in the storage space | G | x 100 (kg) | x 50 (kg) |
| Wheelbase of the vehicle | R | ÷ 325 (cm) | ÷ 325 (cm) |
| **Load on the rear axle (add to the axle load)** | | **138.5 (kg)** | **38.5 (kg)** |
| Weight in the storage space | | - 100 (kg) | - 50 (kg) |
| **Load relief to the front axle (subtract from the axle load)** | | **38.5 (kg)** | |
| **Load on the front axle (add to the axle load)** | | | **-11.5 (kg)** |

## 4.2.4 Roof load

- ▶ Do not climb onto the roof. Only use a ladder to climb up if a roof rail is fitted.
- ▶ Take care when stepping onto the ladder. There is danger of slipping when the ladder is moist or icy.
- ▶ Do not overload the roof. Road behaviour and brake reaction deteriorate as the roof load increases.

- ▷ If the vehicle is equipped with a roof rail, load racks can be mounted on the roof rail for roof loads (e.g. for surfboards, rubber boats or light canoes). Special girder systems are available as accessory. The authorised dealer or service centre will be happy to advise you.
- ▷ The maximum permissible roof load is 75 kg.
- ▷ Secure roof loads with tension belts. Do not use rubber expanders.
- ▷ Observe the overall height of the vehicle when the roof rack is loaded.

▷ The driver's cabin should have a clearly visible notice stating the overall height. This eliminates the need for calculations at bridges and thoroughfares.

### 4.2.5 Bike rack

- ▶ Observe the permissible axle loads and maximum permissible gross weight when loading the bike rack.
- ▶ Bicycles may not jut out beyond the maximum width of the vehicle. Adjust the attachments for the bikes accordingly.
- ▶ Load the bike rack with bicycles only.
- ▶ Do not transport more than the permitted number of bicycles for the bike rack used.
- ▶ Check the secure attachment of the bicycles on the bike rack after the first 10 km and then at each break in the journey.
- ▶ Do not use the bike rack as luggage rack or ladder.

- ▷ The identification plate and rear lights must not be covered.
- ▷ Driving with a folded out bike rack without bicycles is not permitted.
- ▷ Before every journey, check:

  Is the bike rack without bicycles folded in correctly?

  Are the bicycles securely fastened to the bike rack using the bike rack belts?

**Loading the bike rack with bicycles**

When loading the bike rack, observe the centre of gravity. The centre of gravity of the bicycles must be as close as possible to the rear wall of the vehicle. The bike rack should always be loaded from the inside to the outside.

Loading the bike rack correctly:

- Fold the bike rack downwards.
- Place the heaviest bicycle directly against the rear wall.
- Place the lightest bicycles in the centre or on the outside of the bike rack.
- Secure the front and rear wheels of each bicycle with the retaining straps on the bike rack.
- In addition, fasten the outermost bicycle on the retaining bracket or retaining arm.

If the bike rack is only loaded with **one** bicycle, position the bicycle as closely as possible to the rear wall.

## 4.3 Towing

- ▶ Care is to be taken when connecting and detaching a trailer. Risk of accident and injury!
- ▶ No persons are to be between the motorhome and the trailer during positioning for connecting and detaching.
- ▶ Observe the permissible nose weight and rear axle load of the motorhome. Nose weight and rear axle load must not be exceeded. The values of the nose weight and rear axle load are included in the documents of the vehicle and the caravan coupling.

▷ Trailer with an overrun brake: Do not connect or detach trailer with the overrun brake on.

▷ Caravan coupling with detachable ball neck: If the ball neck is mounted incorrectly, there is the danger of the trailer breaking away. Observe the instruction manual for the caravan coupling.

▷ Base vehicle Fiat, "Light" version: The maximum permissible nose weight of the vehicle is 100 kg.

▷ Base vehicle Fiat, "Heavy" version: The maximum permissible nose weight of the vehicle is 120 kg.

## 4.4 Electrically operated entrance step

▶ Before commencing the journey and after short interruptions of the journey, ensure that the entrance step is completely retracted.

▶ Do not stand in the direct range of the entrance step while it is being retracted or extended.

▶ Do not step on the entrance step until it has extended completely. There is a risk of injury.

▶ To prevent danger of slipping, clean the entrance step if necessary before entering (snow, ice, mud, etc.).

▶ Do not under any circumstances raise or lower persons or loads with the entrance step.

▶ Following a cold start, for vehicle-related reasons it can take a few seconds before the warning tone sounds.

▷ Do not grease or lubricate the pivot bearing and joints of the entrance step (see chapter 12).

▷ The button to operate the entrance step is located on the inside of the vehicle in the area of the conversion door.

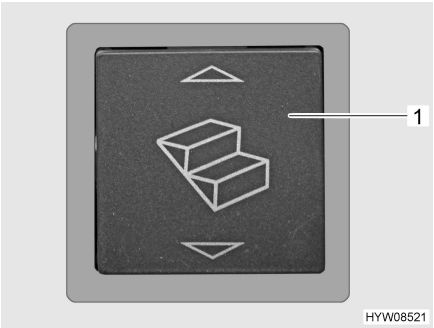


Fig. 1 Rocker button for entrance step (entrance area)

*Retracting or extending:*

■ Press the rocker button (Fig. 1,1) situated in the entrance area.

When the engine is running and the entrance step is extended, a warning tone is heard. The warning tone ceases as soon as the entrance step is retracted.

## 4.5 Television

▶ Before commencing the journey, store the television securely.

## 4.6 Sink cover

▶ In the event of an accident or emergency braking, the sink cover (Fig. 2,1) could injure the occupants of the vehicle. Before the journey, take the sink cover off the sink and store it securely in the kitchen unit or wardrobe.


Fig. 2 Sink cover

## 4.7 Gas regulator

▶ Operating gas-operated appliances during the journey is permitted only if the gas system has the relevant equipment. The hose break guard and crash sensor prevent an escape of gas in the event of an accident.

Depending on the equipment, different gas regulators can be installed in the vehicle.

If a gas regulator other than one of those listed below is installed in the vehicle, the regulator tap on the gas bottle and the gas isolator taps must be closed during the journey.

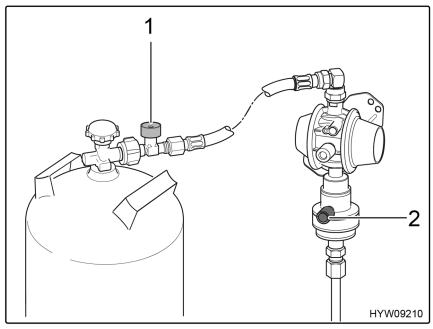


Fig. 3 MonoControl gas regulator

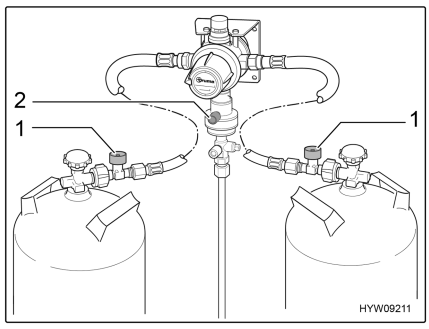


Fig. 4 DuoControl gas regulator

**Gas regulator with crash sensor and hose break guard**

If a gas regulator with a crash sensor (Fig. 3,2 and Fig. 4,2) and hose break guard (Fig. 3,1 and Fig. 4,1) is installed in the vehicle:

The regulator tap on the gas bottle and the "Heater" gas isolator tap may remain open during the journey. Gas-operated appliances may be on during the journey.

The design details of the MonoControl (Fig. 3) and DuoControl (Fig. 4) gas regulators can vary (straight or angled).

▷ If in doubt, get the relevant information from authorised dealers or service centres.

## 4.8 Snow chains

▷ Only mount snow chains if there is a clearance of at least 50 mm between the tyres and the vehicle body.

▷ When using snow chains, the tyres, wheel suspension and steering are subjected to an additional load. When using snow chains, drive slowly (maximum speed 50 km/h) and only on streets which are completely covered with snow. Otherwise the vehicle could be damaged.

▷ Observe the fitting instructions issued by the manufacturer of the snow chains.

▷ Do not fit snow chains on alloy wheel rims.

The use of snow chains is subject to the legal regulations of the individual countries.

- Always mount snow chains to the drive wheels.
- After a few metres, check the tension of the snow chains.

## 4.9 Road safety

▶ Check tyre pressure before a journey or every 2 weeks. Wrong tyre pressure causes excessive wear and can lead to damage or even to tyre burst. You can lose control of the vehicle (see section 14.5).

Before commencing the journey, work through the checklist:

**Base vehicle**

| No. | Checks | Checked |
|---|---|---|
| 1 | All vehicle documents are on board | |
| 2 | Tyres in proper condition and tyre pressure correct | |
| 3 | Vehicle lighting, brake lights and reversing lights function | |
| 4 | Oil levels for engine, gearbox and power steering controlled | |
| 5 | Coolant and fluid for windscreen washers filled up | |
| 6 | Brakes function | |
| 7 | Brakes react evenly | |
| 8 | When braking, the vehicle remains in the lane | |

| | No. | Checks | Checked |
|---|---|---|---|
| **Housing body, outside** | 9 | Awning completely retracted | |
| | 10 | Roof free of snow and ice (in winter) | |
| | 11 | External connections and lines disconnected and stored away | |
| | 12 | External supports removed | |
| | 13 | Entrance step retracted (observe warning tone) | |
| | 14 | Rear doors closed | |
| | 15 | Overall height of the vehicle including roof rack when loaded measured and noted. Keep the height information close at hand in the driver's cabin | |
| **Housing body, inside** | 16 | Windows and skylights closed and locked | |
| | 17 | Television secured | |
| | 18 | Television antenna retracted (if one is built in) | |
| | 19 | Loose parts stored away or fixed in position | |
| | 20 | Open storage spaces empty | |
| | 21 | Refrigerator door secured | |
| | 22 | Refrigerator set to 12 V operation | |
| | 23 | All drawers and flaps closed | |
| | 24 | Children's seats only mounted on the seats approved for this purpose | |
| | 25 | Swivel seat locking device for driver's seat and front passenger's seat locked | |
| | 26 | Shades in the driver's cabin opened and secured | |
| **Gas system** | 27 | Gas bottles firmly fixed in the gas bottle compartment so that they are unable to turn | |
| | 28 | If the gas bottles are not connected to the gas tube, always place the protective cap on top | |
| | 29 | Regulator tap on the gas bottle and gas isolator taps are closed<br>▷ When there is a MonoControl / DuoControl regulating system: When heating is required during travel the gas isolator tap "Heater" and the regulator tap can remain open. | |
| **Electrical system** | 30 | Check the battery voltage of the starter and living area battery (see chapter 9). If the panel indicates that the battery voltage is too low, the respective battery will need to be recharged. Observe the notes and instructions in chapter 9<br>▷ Commence journey with fully charged starter and living area batteries. | |

## Chapter overview

This chapter contains instructions on how to drive the motorhome.

The instructions address the following topics:

- driving speed
- brakes
- seat belts
- seats and headrests
- seating arrangement
- Roman shades in the driver's cabin
- external doors
- filling the tank

## 5.1 Driving the motorhome

- ▶ The base vehicle is a commercial vehicle (small truck). Adjust your driving technique accordingly.
- ▶ Before commencing the journey and after short interruptions of the journey, ensure that the entrance step is completely retracted.
- ▶ When you start the engine, warning signals such as "entrance step extended" can sound. Under certain conditions (a cold start in winter) after the engine is started it can take up to 15 seconds for these warning signals to sound.
- ▶ A seat belt is fitted for each seat which is permitted for travel. Please keep your seat belt fastened during the journey.
- ▶ Never open your seat belts when travelling.
- ▶ Passengers must remain in the seats provided.
- ▶ The doors must remain locked.
- ▶ Avoid braking with a jerk.
- ▶ If a navigation system is used, only change the destination when the vehicle is stationary. Drive to a car park or stop in a safe area when changing the destination.
- ▶ Do not play DVDs using the monitor of the navigation system during the journey.

▷ Drive slowly on poor roads.

▷ If an accident occurs as a result of these instructions not being observed, the manufacturer will not be responsible for damages caused.

▷ The safety measures stipulated in chapter 3 have to be observed.

## 5.2 Driving speed

- ▶ The vehicle is equipped with a powerful engine. This means there are sufficient reserves in difficult traffic situations. This high power enables a high maximum speed and requires above-average driving ability.
- ▶ The vehicle provides a large contact surface for wind. A sudden cross-wind can be especially dangerous.
- ▶ Uneven or one-sided loading affects road performance.
- ▶ Driving on unknown streets, you may encounter hazardous road conditions and unexpected driving situations. Therefore, in the interest of safety, make sure your driving speed is appropriate to any given driving situation and environment.
- ▶ Adhere to the national legal speed limits.

## 5.3 Brakes

- ▶ Have defects on the braking system immediately remedied by an authorised specialist workshop.

**Before each journey**

Before each journey, check by means of a braking test:

- Do the brakes function?
- Do the brakes react evenly?
- Does the vehicle remain in the lane when braking?

## 5.4 Seat belts

### 5.4.1 General

The vehicle is equipped with seat belts in the living area on the seats for which seat belts are compulsory by law. National regulations apply to fastening of seat belts.

- ▶ Fasten your seat belts before the beginning of the journey and keep them fastened during the journey.
- ▶ Do not damage or trap belts. Have damaged seat belts changed by an authorised specialist workshop.
- ▶ Do not alter the belt fixing devices, automatic seat belt winders and the belt clips.
- ▶ Only use one seat belt for **one** adult person.
- ▶ Do not belt in objects together with persons.
- ▶ Seat belts are not sufficient for persons who are less than 150 cm tall. In these cases use additional restraining devices. Observe test certificate.
- ▶ After an accident, replace the seat belts.
- ▶ During the journey, do not tilt the backrest too far backwards. Otherwise the functionality of the seat belt is no longer guaranteed.

### 5.4.2 Fastening the seat belt correctly

- ▶ Do not twist the belt. The belt must be positioned smoothly against the body.
- ▶ When fastening the seat belt, adopt the correct sitting position.

The seat belt is correctly fastened when the lap belt passes below your stomach and across the hip bone. The shoulder belt must pass across the chest and shoulder (not across your neck). The belt must always be taut against your body. Any bulky or padded clothing should therefore be removed before you start your journey.

## 5.5 Driver's seat and front passenger's seat

- ▶ Before commencing the journey, rotate all swivel seats in the direction of travel and lock in position.
- ▶ The seats must remain fixed in position during the journey and are not to be rotated.

▷ The driver's and front passenger's seat are a part of the base vehicle, depending on model and vehicle equipment. In this case the adjustment of the seats is described in the operating instructions of the base vehicle.


Fig. 5 Operating controls on the seat

**Rotating seat into driving position**

The seats can be rotated in any direction. The seats can only be locked in position in the direction of travel.

- Push both armrests upward.
- Push the seat backwards or into the central position.
- Rotate the seat in the direction of travel and lock in position.

▷ Rotating the seats in the pitched vehicle is described in chapter 7.

**Adjusting seat in lengthways direction**

Adjust the driver's seat so that the driver can depress the pedals comfortably.

- Pull the bar (Fig. 5,2) upwards.
- Push the seat forwards or backwards.
- Release the bar. The seat must audibly lock into place.

**Setting the seat inclination**

Adjust the seat inclination so that the thighs rest on the seat surface without any pressure.

- Pull the handle (Fig. 5,3) upwards.
- Bring the front seat into the desired inclination position by applying or relieving pressure.
- Release handle. The seat must audibly lock into place.
- Pull the handle (Fig. 5,4) upwards.
- Bring the rear seat into the desired inclination position by applying or relieving pressure.
- Release handle. The seat must audibly lock into place.

**Adjusting the backrest**

Adjust the angle of the backrest of the driver's seat so that the steering wheel can be held with the arms slightly bent.

- Turn the knurled knob (Fig. 5,5). The backrest inclines forwards or backwards, depending on the rotation direction.

**Adjusting the armrest**

The height of the armrests can be steplessly adjusted.

- Turn the knurled wheel (Fig. 5,1). The armrest inclines upwards or downwards, depending on the rotation direction.

## 5.6 Headrests


Fig. 6 Bench headrest

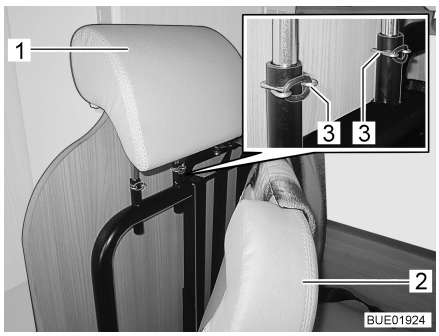


Fig. 7 Adjusting the headrest

Before commencing the journey, adjust the headrest (Fig. 7,1) so that the back of the head is supported at approximately ear height.

*Adjusting the headrest:*

- Fold the cushion (Fig. 7,2) forwards.
- Remove the safety clamps (Fig. 7,3).
- Pull the headrest (Fig. 7,1) upward or push it downward until it reaches the desired locking position.
- Fit the safety clamps.
- Fold back the cushion.

## 5.7 Seating arrangement

- ▶ During the journey, persons are only to sit on the permitted seats. The authorised number of seats is stipulated in the vehicle documents.
- ▶ During the journey sitting on the divans is not permitted.
- ▶ Seat belts must be worn by all passengers.

Seats which may be used during travel are equipped with a seat belt.

## 5.8 Roman shades for the windscreen

▶ While driving, the Roman shade for the windscreen must be open, in a fixed position and secured.

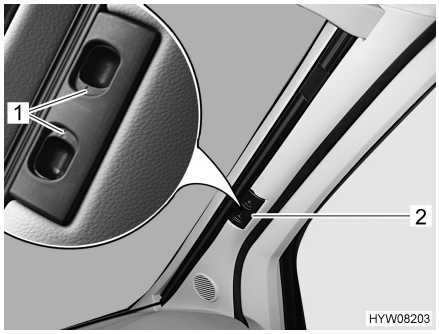


Fig. 8 Roman shade for the windscreen

*Securing:*

- Use the handle (Fig. 8,2) to pull the two halves of the Roman shade for the windscreen outwards as far as they will go.
- Allow the release handles (Fig. 8,1) to engage.

## 5.9 Roman shades for driver's window and front passenger's window

▶ While travelling, the Roman shades for the driver's window and front passenger's window must be open, in a fixed position and secured.

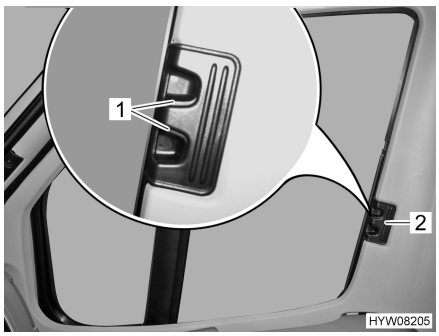


Fig. 9 Locking mechanism for Roman shades on driver's/front passenger's windows

*Securing:*

- Use handle (Fig. 9,2) to push in the Roman shade as far as possible.
- Allow the release handles (Fig. 9,1) to engage.

## 5.10 External doors

▶ Only drive with locked external doors.

▷ Locking the doors can prevent them from opening of their own accord, e.g. during an accident.

▷ Locked doors also prevent forced entry, e.g. when waiting at traffic lights. However, in an emergency, locked doors make it more difficult for helpers to enter the vehicle.

▷ When leaving the vehicle, always lock the doors.

▷ The doors are part of the base vehicle. The opening and closing of the doors is described in the instruction manual of the base vehicle.

## 5.11 Refuelling

▶ No appliance operated via the built-in burner (e.g. heater or refrigerator) may be in operation when filling the fuel tank, on ferries or in the garage. Danger of explosion!

Refer to the instruction manual for the base vehicle for the position of the fuel filler neck.

## Chapter overview

This chapter contains instructions on how to pitch the vehicle.

The instructions address the following topics:

- handbrake
- entrance step
- 240 V connection
- refrigerator
- retracting and extending the awning

▷ Pitch the vehicle so that it is as horizontal as possible. Secure the vehicle to prevent it from rolling.

▷ Animals (especially mice) can cause great damage to the interior of the vehicle. To prevent this from happening, regularly check the vehicle for damages or animal traces after pitching.

## 6.1 Handbrake

Firmly apply the handbrake when parking the vehicle.

## 6.2 Entrance step

In order to exit the vehicle, first fully extend the entrance step. If the entrance step is extended while the engine is still running, a warning tone will sound.

## 6.3 240 V connection

The vehicle can be connected to a 240 V power supply (see chapter 9).

## 6.4 Refrigerator

If the refrigerator runs for an extended period without the vehicle being connected to an external 240 V power supply, the living area battery is discharged.

## 6.5 Awning

▷ When the support legs are not positioned, extend the awning a maximum of 1 m.

▷ Retract the awning in strong wind, rain or snow.

▷ In the case of light rain, shorten one of the support legs so that water can run off.

▷ In case of light wind or rain, anchor the awning with ropes on both sides.

▷ Only retract the awning when the fabric is dry. When the awning must be retracted while the fabric is still wet: Extend the awning as soon as possible, in order to dry out the fabric.

▷ Before retracting, remove leaves and coarse dirt from the awning.

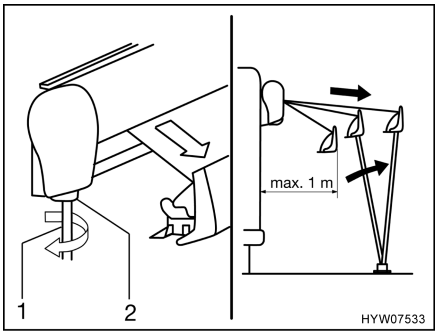


Fig. 10 Extend awning

*Extending the awning:*

- Insert the crank (Fig. 10,1) in the bayonet socket (Fig. 10,2) of the awning and turn in an anticlockwise direction.
  The awning begins to extend after a few rotations.
- Continue turning the crank until the awning is extended approx. 1 m.

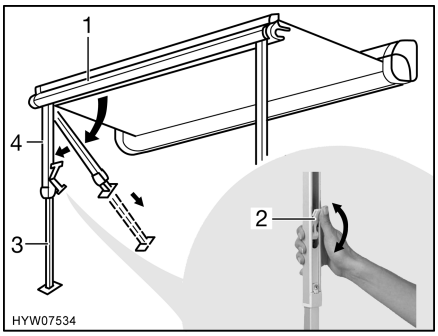


Fig. 11 Position support legs

- Release the support legs (Fig. 11,4) out of the front bar (Fig. 11,1) applying slight outward pressure.
- Hold the lower part of the support legs.
- Pull out the lower part of the support legs (Fig. 11,3) until reaching the desired length.
- Close the lock on the support legs. In order to do this, press the catch lever (Fig. 11,2) upward.
- Use the crank to completely extend the awning.
- Turn the crank slightly in a clockwise direction to tighten the fabric.
- Set the support legs to their final height.
- Remove the crank from the bayonet socket and store it.
- Clamp the support legs in the brackets on the vehicle (if mounted) or fasten to the ground using tent pegs.

*Retracting the awning:*

- If present, remove guy ropes and tent pegs, or remove the support legs out of the brackets in the vehicle.
- Insert the crank in the bayonet socket of the awning ant turn in a clockwise direction until the awning has been retracted up to approx. 1 m.
- If necessary, clean the support legs.
- Open the lock on the support legs. In order to do this, turn the catch lever downward.
- Push the lower part of the support legs in completely.
- Fold both support legs upward into the front bar and let them click into position. In order to do this, apply slight outward pressure on the support legs.
- Continue turning the crank until the awning has been retracted completely.
- Remove the crank from the bayonet socket and store it.

## Chapter overview

This chapter contains instructions about living in the vehicle.

The instructions address the following topics:

- opening and closing the doors and external flaps
- ventilation of the vehicle
- opening and closing the windows and blinds
- opening and closing the Roman shades in the driver's cabin
- opening and closing the skylights
- rotating the seats
- converting tables
- use of the beds

## 7.1 External doors

▶ Only drive with locked external doors.

▷ Locking the doors can prevent them from opening of their own accord, e.g. during an accident.

▷ Locked doors also prevent forced entry, e.g. when waiting at traffic lights. However, in an emergency, locked doors make it more difficult for helpers to enter the vehicle.

▷ When leaving the vehicle, always lock the doors.

▷ The doors are part of the base vehicle. The opening and closing of the doors is described in the instruction manual of the base vehicle.

## 7.2 External flaps

▷ Before commencing the journey, close and lock the external flap.

### 7.2.1 External flap Thetford cassette

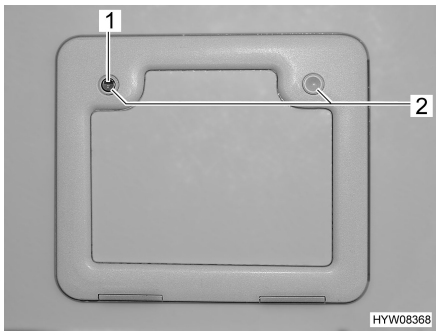


Fig. 12 External flap Thetford cassette

*Opening:*

- Insert key into locking cylinder (Fig. 12,1) of the push-button lock and turn a quarter turn.
- Remove the key.
- Press both push-button locks (Fig. 12,2) simultaneously with your thumb and open the external flap.

*Closing:*

- Close the external flap and press it shut.
- Insert key into locking cylinder (Fig. 12,1) and turn a quarter turn.
- Remove the key.

## 7.3 Ventilation

▶ The oxygen in the vehicle interior is used up by breathing and the use of gas operated appliances. That is why the used air must be replaced permanently. For this purpose, forced ventilation options (e.g. skylights with forced ventilation, mushroom-shaped vents or floor vents) are fitted to the vehicle. Never cover or block forced ventilations from the inside or outside with objects such as e.g. a winter mat. Keep forced ventilations clear of snow and leaves. There is a danger of suffocation due to increased $CO_2$ levels.

▷ Although sufficient ventilation is provided, in certain weather conditions, condensation can form on metal objects (e.g. screwed connections in the floor).

▷ Additional cold spots can occur at thermal "bridges" (e.g. mushroom-shaped vents, skylight edges, sockets, filler necks, flaps, etc.).

**Condensation**

Ensure that there is a continuous exchange of air by providing frequent and efficient ventilation. This is the only method for ensuring that condensation and resulting mould is not formed during cool weather. During the colder season, a pleasant living climate is created if heating output, air distribution and ventilation are synchronised. To avoid draft close the air outlet nozzles on the dashboard and set the air distribution of the base vehicle to air circulation.

If the vehicle is laid up for a longer period, occasionally ventilate it well, especially in summer as heat accumulation can occur. Do not only air the interior, but also the storage spaces which are accessible from the outside. Air the parking place as well if the vehicle is parked in a closed space (e.g. garage). The occurrence of condensation could lead to the formation of mould.

## 7.4 Windows

- ▷ The windows are fitted with a blind or Roman shade and with an insect screen or folding insect screen. After the latch has been released, the blind and insect screen automatically spring back to the initial position by tensile force. In order not to damage the tension mechanics, hold onto the blind or insect screen and allow it to slowly return to the initial position. The Roman shade and folding insect screen are made of thin woven fabric. In order not to damage the Roman shade or the insect screen, grasp the respective handle and carefully return it to the initial position.
- ▷ Do not keep blinds closed over a longer period of time as that can cause increased material wear.
- ▷ If the blind or the Roman shade is completely closed, exposure to direct sunlight can cause heat to accumulate between the blind/the Roman shade and the glass window. The window could be damaged. For that reason, close the blind/Roman shade only 2/3 of the way in direct sunlight.
- ▷ Before commencing the journey, close the windows.
- ▷ Depending on the weather, close the windows far enough to prevent moisture from entering.

- ▷ When leaving the vehicle, always close the windows.
- ▷ In extreme weather conditions or if the temperature fluctuates strongly, a light condensation film can form on the double-glazed acrylic glass. The glass is designed in such a way that condensation can evaporate when the external temperature increases. There is no danger of the double-glazed acrylic glass being damaged by condensation.
- ▷ The upholstery will fade over time, if it is exposed to sunlight. If the temperature within the vehicle rises rapidly as well, the colour will change at an accelerated rate.
  Therefore, we recommend to close the shades on the windows when there is strong sunlight. Ensure that heat does not build up when you close the blind.

### 7.4.1 Hinged window

- ▷ If windows with automatic hinges are fitted, open the window fully in order to release the lock. If the locking device is not released and the window is closed nevertheless, there is the danger of the window breaking due to the massive counter-pressure.
- ▷ When opening the hinged windows, ensure that there are no torsional forces. Open and close the hinged windows evenly.

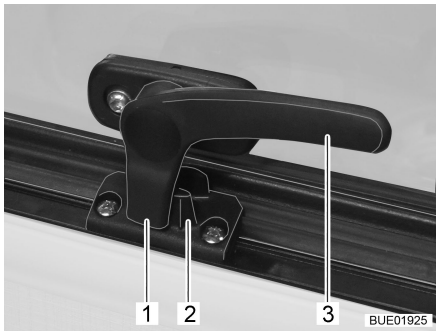


Fig. 13 Catch lever in "closed" position

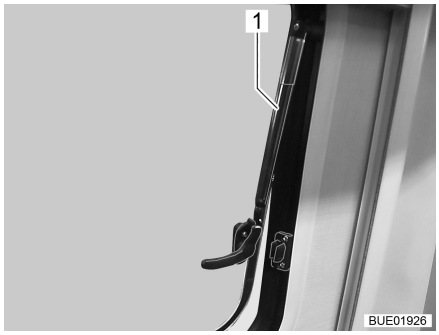


Fig. 14 Hinged window with automatic hinges, open

*Opening:*

- Turn the catch lever (Fig. 13,3) a quarter turn towards the centre of the window.
- Open hinged window half up to the required position. Allow the hinged window to engage automatically with the automatic hinge (Fig. 14,1).

The hinged window remains locked in the required position.

*Closing:*

- Open the hinged window as wide as necessary until the latch releases.
- Close the hinged window.
- Turn the catch lever (Fig. 13,3) a quarter turn towards the window frame. The locking catch (Fig. 13,1) is located on the inside of the window catch (Fig. 13,2).

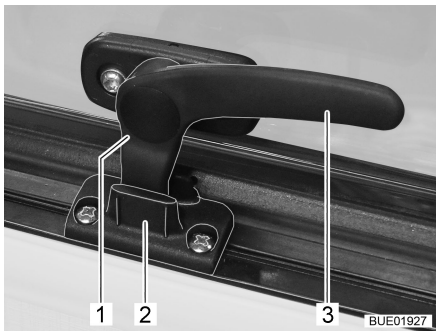


Fig. 15 Catch lever in "continuous ventilation" position

**Continuous ventilation**

With the catch lever, the hinged window can be placed in two positions:

- "Continuous ventilation" (Fig. 15)
- "Firmly closed" (Fig. 13).

To place the hinged window into the "continuous ventilation" position:

- Turn the catch lever (Fig. 15,3) a quarter turn towards the centre of the window.
- Slightly open the hinged window outwards.
- Turn the catch lever a quarter turn towards the window frame. The locking catch (Fig. 15,1) has to be moved into the recess of window catch (Fig. 15,2).

During the journey, the hinged window may not be in "continuous ventilation" position.

If it rains, the "continuous ventilation" hinged window position could lead to splashing water penetrating the living area. Therefore, close the hinged windows completely.

### 7.4.2 Roman shade and insect screen

The windows are fitted with a Roman shade and an insect screen. The Roman shade and insect screen can be adjusted separately or together. If adjusted together, the handles are held together magnetically.


Fig. 16 Roman shade and insect screen

*Opening/closing the Roman shade:*

- Hold the handle (Fig. 16,1) in the centre and pull it up/down carefully. The Roman shade will stay in any desired position.

*Opening/closing the insect screen:*

- Hold the handle (Fig. 16,2) in the centre and pull it up/down carefully. The insect screen will stay in any desired position.

### 7.4.3 Roman shades for the windscreen

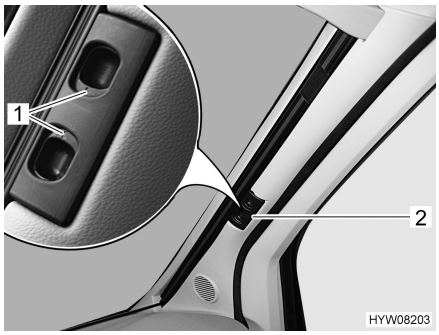


Fig. 17 Roman shade for the windscreen

*Closing:*

- Press the release handles (Fig. 17,1) and hold them down.
- Use the handle (Fig. 17,2) to pull the Roman shade for the windscreen towards the centre of the window.
- Close the second Roman shade for the windscreen in the same way. A magnetic catch holds both parts of the Roman shade together in the centre.

*Opening:*

- Press the release handles (Fig. 17,1) and hold them down.
- Use the handle (Fig. 17,2) to pull the two halves of the Roman shade for the windscreen outwards as far as they will go.
- Let go of the release handles (Fig. 17,1) and let them engage.

### 7.4.4 Roman shades for driver's window and front passenger's window

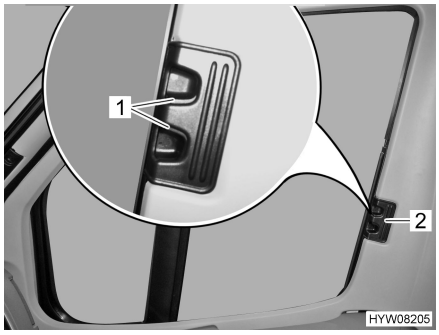


Fig. 18 Roman shade for driver's and passenger's window

*Closing:*

- Press the release handles (Fig. 18,1) and hold them down.
- Using the handle (Fig. 18,2), draw the Roman shades for the driver's and passenger's window to the other side of the window and secure them to the magnetic strips.

*Opening:*

- Press the release handles (Fig. 18,1) and hold them down.
- Use handle (Fig. 18,2) to push in the Roman shades for the driver's and passenger's window as far as possible.
- Let go of the release handles (Fig. 18,1) and let them engage.

## 7.5 Skylights

▶ The apertures for forced ventilation must always be kept open. Never cover or block forced ventilations with objects such as e.g. a winter mat. Keep forced ventilations clear of snow and leaves.

▷ The skylights are fitted with a blind or Roman shade and with an insect screen or folding insect screen. After the latch has been released, the blind and insect screen automatically spring back to the initial position by tensile force. In order not to damage the tension mechanics, hold onto the blind or insect screen and allow it to slowly return to the initial position. The Roman shade and folding insect screen are made of thin woven fabric. In order not to damage the Roman shade or the insect screen, grasp the respective handle and carefully return it to the initial position.

▷ Do not keep blinds closed over a longer period of time as that can cause increased material wear.

▷ If the blind or the Roman shade is completely closed, exposure to direct sunlight can cause heat to accumulate between the blind/the Roman shade and the skylight. The skylight could be damaged. For that reason, close the blind/Roman shade only 2/3 of the way in direct sunlight. Open the skylight slightly or move it to ventilation position.

▷ Depending on the weather, close the skylights far enough to prevent moisture from entering.

▷ Do not climb on the skylights.

▷ Before commencing the journey, close the skylights.

▷ Before commencing the journey, check that the skylights are closed and locked.

▷ Before commencing the journey, open the blinds or Roman shades.

▷ When leaving the vehicle, always close the skylights.

▷ The upholstery will fade over time, if it is exposed to sunlight. If the temperature within the vehicle rises rapidly as well, the colour will change at an accelerated rate.
Therefore, we recommend closing the shades on the skylights of the parked vehicle by 2/3 when there is strong sunlight.

### 7.5.1 Skylight with snap latch

The skylight can be pushed upwards either from one side or from both sides.

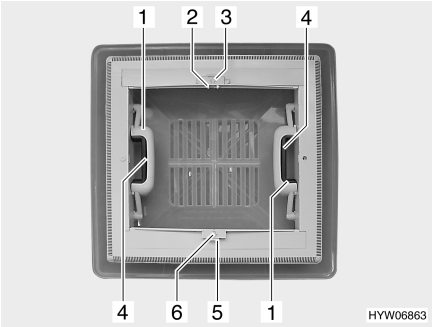


Fig. 19 Skylight with snap latch

*Opening:*
- Push the spring-loaded latch (Fig. 19,4) towards the inside of the skylight. At the same time use the handle (Fig. 19,1) to press the skylight upwards.

*Closing:*
- Using both handles (Fig. 19,1), pull down the skylight with force until the two snap latches lock into place.

**Blind**

When the insect screen is closed and locked to the blind, the blind can still be closed. When the blind is closed, the insect screen is moved along with it.

*Closing:*
- Push the locking mechanism (Fig. 19,5) towards the outside of the skylight.
- Pull blind at the handle (Fig. 19,6) to the opposite handle of the insect screen (Fig. 19,2) and allow to engage.

*Opening:*
- Clench the handle (Fig. 19,2). The latch is released.
- Use the handle (Fig. 19,6) to move the blind slowly back to its initial position.

**Insect screen**

If the insect screen is locked with the blind, the blind is also moved along on closing the insect screen.

*Closing:*
- Push the locking mechanism (Fig. 19,3) towards the outside of the skylight.
- Pull insect screen at the handle (Fig. 19,2) to the opposite handle of the blind (Fig. 19,6) and allow to engage.

*Opening:*
- Clench the handle (Fig. 19,2). The latch is released.
- Use the handle (Fig. 19,2) to slowly move back the insect screen.

### 7.5.2 Hinged skylight

▷ If it rains and the hinged skylight is in ventilation position, that could lead to water penetrating the living area. Therefore close hinged skylight completely.

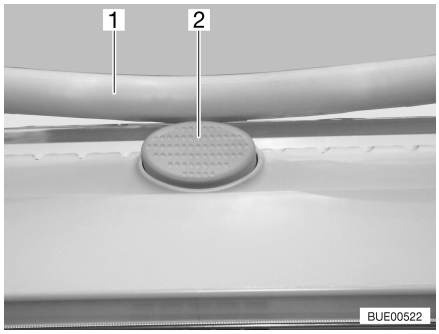


Fig. 20 Safety knob on the hinged skylight

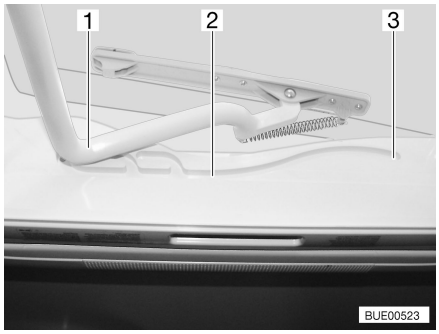


Fig. 21 Hinged skylight, guide

The hinged skylight is opened on one side only.

*Opening:*

- Press the safety knob (Fig. 20,2) and pull the bar (Fig. 20,1) down with both hands.
- Pull the bar (Fig. 21,1) in the guides (Fig. 21,2) to the rearmost position (Fig. 21,3).

*Closing:*

- Use both hands to push the bar (Fig. 21,1) slightly upwards.
- Push the bar back in the guides.
- Push the bar upwards with both hands until it is above the safety knob (Fig. 20,2).

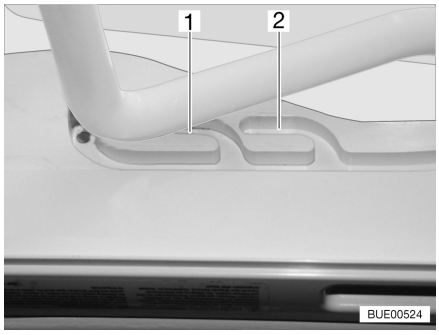


Fig. 22 Hinged skylight in ventilation position

**Ventilation position**

The hinged skylight can be put in two ventilation positions: Bad weather position (Fig. 22,1) and central position (Fig. 22,2).

- Press the safety knob (Fig. 20,2) and pull the bar (Fig. 20,1) down with both hands.
- Pull the bar in the guides (Fig. 21,2) to the desired position.
- Push the bar slightly upwards and into the selected guide (Fig. 22,1 or 2).

**Roman shade** To close and open the Roman shade:

*Closing:*
- Pull out Roman shade at the handle and release in the required position. The Roman shade will stay in that position.

*Opening:*
- Slowly push the Roman shade at the handle to its initial position.

**Insect screen** To close and open the insect screen:

*Closing:*
- Pull the insect screen by the handle to the opposite handle of the Roman shade.

*Opening:*
- Press the rear part of the handle of the insect screen. The latch is released.
- Use handle to return the insect screen slowly to its initial position.

## 7.6 Storage spaces

- ▶ Follow the safety instructions (sticker) that indicate when a space may not be used as a storage space (e.g. gas bottle compartment or spaces close to electrical wiring).
- ▶ Observe the permissible loads on front and rear axles, and the permissible total weight (see section 4.2.3).
- ▶ Do not transport fluids in the living area that emit gases hazardous to health.
- ▶ Close fluid containers tightly, secure them against sliding and against falling over.
- ▶ Always store heavy objects safely and slip-proof in the foot area. Lighter objects can be also stored safely in higher areas.

▷ Do not store wet clothes in cabinets or storage spaces.

▷ While storing the load, take into account how accessible the different objects should be, and how often they are used.

In the vehicle, there are the following possibilities for storage:

- Double floor area
- Wall-mounted cupboards

### 7.6.1 Storage compartment in double floor

▷ Depending on the equipment, a carpet segment will have to be put aside to gain access to the storage compartments.

The storage compartments are accessible through lids in the living area. The disposition of the storage compartments is dependent on the model.

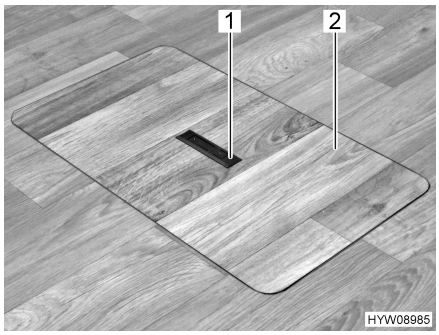


Fig. 23 Floor storage compartment cover (handle recessed)

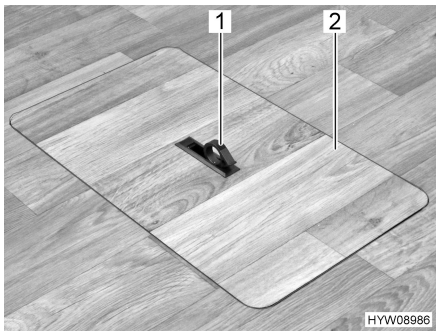


Fig. 24 Floor storage compartment cover (handle swung out)

*Opening:*

- If necessary, lay carpet segment aside.
- Push one side of the grip plate (Fig. 23,1) downwards. The handle (Fig. 24,1) swivels upwards.
- Remove the cover (Fig. 24,2) upwards.

▶ Close the lid and recess the handle as soon as possible. Otherwise, there will be danger of tripping due to the open floor storage compartment or the protruding handle.

▶ Do not bend the carpet segments.

▶ Do not leave the carpet segments laying in the room. Danger of tripping!

*Closing:*

- Insert the cover (Fig. 24,2) in the frame on the floor.
- Swivel handle downwards.

## 7.7 Rotating seats

▶ Before commencing the journey, rotate all swivel seats in the direction of travel and lock in position. During the journey, the swivel seats must remain locked in place in the direction of travel.

The lever for rotating the seat is located at the left or the right of the seat.


Fig. 25 Driver's seat and front passenger's seat

*Turning:*

- Push both armrests at the driver's/front passenger's seat upward.
- Push the driver's seat/front passenger's seat backwards or into the central position.
- Actuate the lever (Fig. 25,1) to turn the seat. The seat is released from the locking device.

The seats can be rotated in any direction. The seats can only be locked in position in the direction of travel.

## 7.8 Spotlight

▶ Bulbs and light fittings can be extremely hot.

▶ Allow the light bulbs and lamp holders to cool down before touching them.

▶ If the light is switched on or still hot, there must always be a safety distance of at least 30 cm between stores or curtains and flammable objects. Fire hazard!

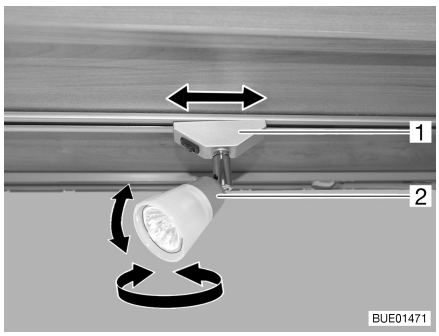


Fig. 26 Spotlight

*Rotating:*

- Grasp the housing (Fig. 26,2) and turn it.

The housing can be turned in different directions:

- To the left and to the right
- Up and down

*Shifting:*

- Grip holder (Fig. 26,1) and turn by approx. 45°.
- Push spotlight along the rail system to desired position.

*Removal:*

- Grip holder (Fig. 26,1) and turn by approx. 90°.
- Remove spotlight from rail.

The spotlight can be installed in any position into the rails.

## 7.9 Tables

### 7.9.1 Suspension table with fold-out leg

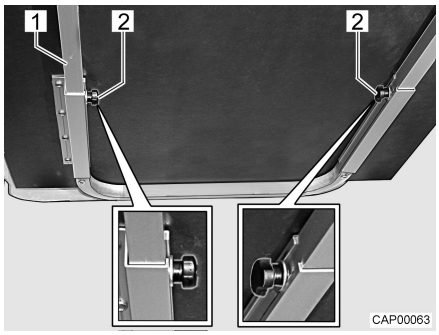


Fig. 27 Moving/extending the suspension table

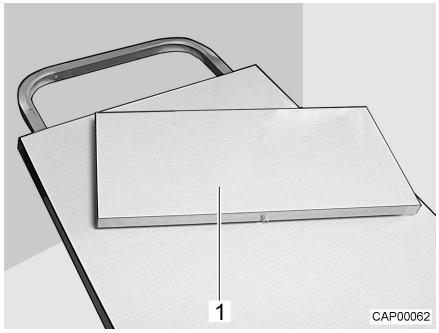


Fig. 28 Table top extension

*Moving the table in the direction of travel:*

- Lift the front of the table top.
- Move the table forwards or backwards (looking in the direction of travel).
- Lower the table top in the desired position and place it on the table leg.

The suspension table size can be enlarged by inserting a table top extension (Fig. 28,1).

*Extending:*

- Loosen the knurled screws (Fig. 27,2).
- Lift the table top slightly and pull out as far as possible. The table extension (Fig. 27,1) is fully extended.
- Set down the table.
- Insert the table top extension (Fig. 28,1) into the table extension.
- Lift the table top slightly and push back as far as possible.
- Tighten the knurled screws.

*Reducing size:*

- Loosen the knurled screws (Fig. 27,2).
- Slightly lift the front of the table top and pull out.
- Remove the table top extension (Fig. 28,1) and store it securely.
- Lift the table top slightly and push back as far as possible. The table extension (Fig. 27,1) is fully retracted.
- Set down the table.
- Tighten the knurled screws.

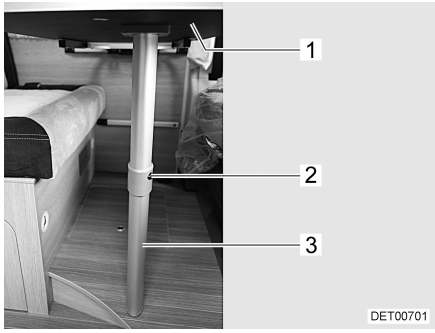


Fig. 29 Bed foundation

The table's fold-out leg enables it to be used as a bed foundation.

*Conversion to bed foundation:*

- Slightly raise the front of the table top (Fig. 29,1).
- Press the release knob (Fig. 29,2) and fold the lower part of the fold-out leg (Fig. 29,3) by 90°.
- Swivel the table top approx. 45° upward and remove the table from the retainer.
- Insert the table into the lower retainer and rest it on the table leg hinge.

## 7.9.2 Folding worktop

▷ The folding worktop is designed only for minimal loads (e.g. kitchen utensils). Do not use the folding worktop as a repository for heavy objects.

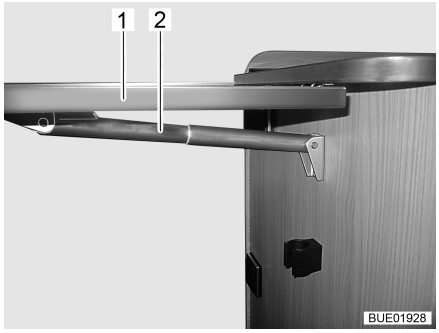


Fig. 30 Folding worktop

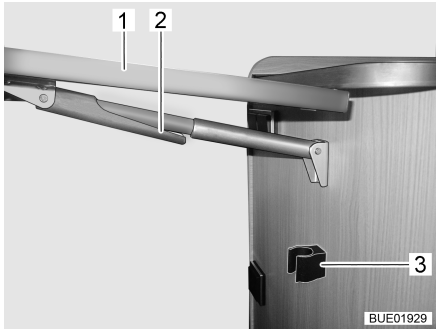


Fig. 31 Folding away the folding worktop

To increase the size of the kitchen work surface, a folding worktop can be folded out at the side of the kitchen counter.

*Bringing the folding worktop into the work position:*

- Hold the folding worktop (Fig. 30,1) from below and pull gently to release it from the lock position.
- Swing up the worktop until the fixture of the telescopic holder (Fig. 30,2) engages. Let go of the worktop.

*Bringing the folding worktop into the travel position:*

- Hold the folding worktop (Fig. 31,1) at the edges and lift gently. With your other hand, swing down the fixture (Fig. 31,2) on the telescopic holder.
- Fold down the worktop until the telescopic holder clicks into position in the holder (Fig. 31,3).

## 7.10 TV unit

An antenna for the reception of radio and television signals via DVB-T is installed in the vehicle.

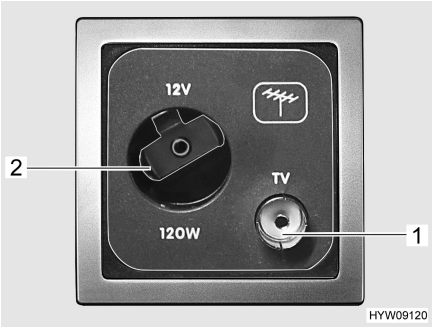


1 DVB-T port
2 12 V socket

Fig. 32 TV-connection

*Receiving terrestrial channels:*

- Plug the suitable cable of the television into the DVB-T port (Fig. 32,1).

## 7.11 Beds

### 7.11.1 Rear bed

- ▶ Always secure loads onto the clamping eyelets. Always use tightening straps or lashing nets for securing the load, never rubber expanders.
- ▶ Do not let the bed fall down when closing it!

Depending on the model, the space under the bed can be used for storage. Fold up the bed to store items in or remove them from the storage space and when transporting larger objects (e.g. bicycles).

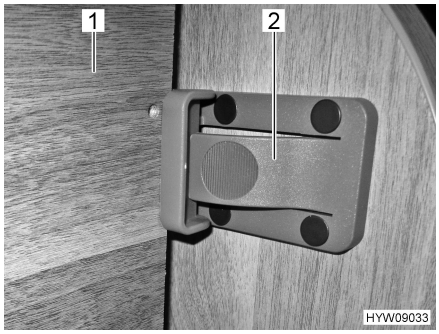


Fig. 33 Securing, front

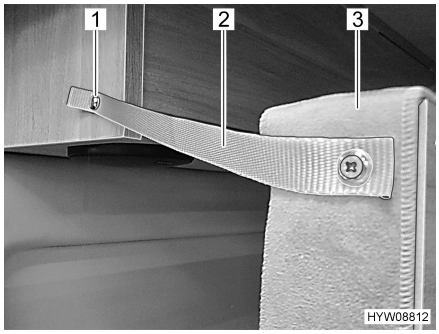


Fig. 34 Securing, back

*Opening:*

- Lift bed (Fig. 33,1).
- Secure the bed (Fig. 34,3) to the roof cabinet with the securing strap (Fig. 34,2) and snap fastener (Fig. 34,1).
- Use the latch (Fig. 33,2) to secure the bed on the furniture wall.

*Closing:*

- Press the latch (Fig. 33,2).
- Undo the snap fastener (Fig. 34,1) on the roof cabinet.
- Hold the bed and guide it all the way down.

### 7.11.2 Additional bed (conversion of the seating group)

▷ Depending on the equipment, the seating group can be converted into a further sleeping place.

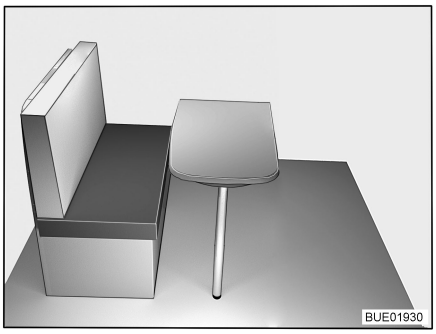


Fig. 35 Prior to conversion

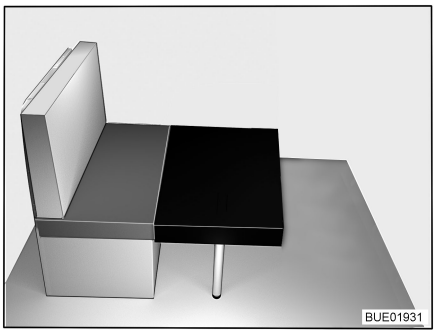


Fig. 36 Conversion (1)

- Fold down the folding worktop.
- Convert the suspension table into a bed foundation (see section 7.9.1).
- Place the small additional cushion onto the table in front of the seat cushion of the bench (refer to Fig. 36).

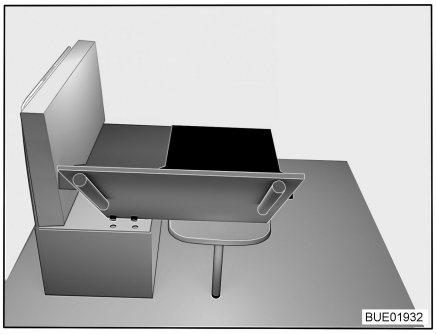


Fig. 37 Conversion (2)

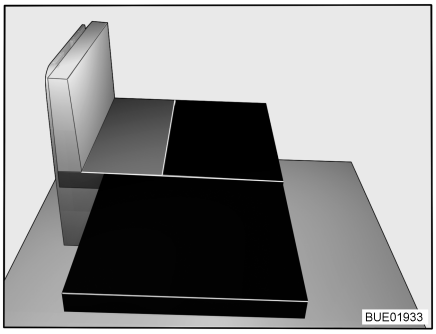


Fig. 38 After conversion

- Insert the journals on the bottom side of the cushion support into the recesses on the bench. In order to do this, lift the seat cushion slightly.
- Fold out the support legs of the cushion support. Put the cushion support down on the support legs.
- Place large additional cushion on the cushion support (refer to Fig. 38).

## Chapter overview

This chapter contains instructions regarding the gas system of the vehicle.

The instructions address the following topics:

- safety
- DuoControl regulating system
- changing the gas bottles
- gas isolator taps

The operation of the gas operation appliances of the vehicle is described in chapter 10.

## 8.1 General

- ▶ The operator of the gas system is responsible for the performance of recurring inspections and for complying with the maintenance intervals.
- ▶ Before commencing the journey, when leaving the vehicle or when gas equipment is not in use, close all gas isolator taps and the main isolator tap on the gas bottle.
- ▶ All gas-operated devices (heater, cooker, oven, grill, refrigerator - depending on the equipment) must be switched off for refuelling, on ferries or in the garage. Danger of explosion!
- ▶ Do not use gas-operated devices in closed spaces (e.g. garages). Danger of poisoning and suffocation!
- ▶ Only have the gas system maintained, repaired or altered by an authorised specialist workshop.
- ▶ Have the gas system checked by an authorised specialist workshop according to the national regulations before commissioning. This also applies for not registered vehicles. For modifications to the gas system have the gas system immediately checked by an authorised specialist workshop.
- ▶ The gas pressure regulator, the gas tubes, and the exhaust gas pipes must also be inspected. The gas pressure regulator and the gas tubes must be replaced observing the nationally defined deadlines (the latest after 10 years). The vehicle owner is responsible for seeing that this is carried out.
- ▶ In case of a defect of the gas system (gas odour, high gas consumption) there is danger of explosion! Close regulator tap on the gas bottle immediately. Open doors and windows and ventilate well.
- ▶ If the gas system is defective: Do not smoke; do not ignite any open flames, and do not operate electric switches (light switches etc.). Check the tightness of gas-conducting parts and lines with leakage search spray. Do not check with an open flame.
- ▶ Only the stipulated devices may be connected to internal connections. Do not operate any device outside the vehicle if it is connected to an internal connector.
- ▶ Before using the cooker make sure that there is sufficient ventilation. Open a window or the skylight.
- ▶ Do not use the gas cooker for heating purposes.
- ▶ If there are several gas devices, each gas device must have its own gas isolator tap. If individual gas devices are not in use, close the respective gas isolator tap.

- Ignition safety valves must close within 1 minute after the gas flame has extinguished. A clicking sound is audible. Check function from time to time.
- The built-in gas devices are exclusively meant for use with propane or butane gas or a mixture of both. The gas pressure regulator as well as all built-in gas devices are designed for a gas pressure of 30 mbar.
- Propane gas is capable of gasification up to -42 °C, whereas butane gas gasifies at 0 °C. Below these temperatures no gas pressure is available. Butane gas is unsuitable for use in winter.
- Due to its function and construction, the gas bottle compartment is a space which is open to the exterior. Never cover or block up the standard forced ventilations. Otherwise gas that is emitted can not be diverted to the outside.
- The gas bottle compartment must not be used as storage space.
- Secure the gas bottle compartment against unauthorised access. To do this, lock the compartment.
- The regulator tap on the gas bottle must be accessible.
- Only connect gas-operated devices (e.g. gas grill) which have been designed for a gas pressure of 30 mbar.
- The exhaust gas pipe must be fitted tightly to the heating system and to the vent and must be sealed. The exhaust gas pipe must not show any evidence of damage.
- Exhaust fumes must be able to escape into the atmosphere unhindered and fresh air must be able to enter unhindered. For this reason, keep the exhaust pipe and intake openings clean and unobstructed (e.g. free from snow and ice). For this reason, no snow walls or aprons may lie against the vehicle.

## 8.2 Gas bottles

- Handle full or emptied gas bottles outside the vehicle only with closed regulator tap and attached protective cap.
- Gas bottles are only to be transported within the designated gas bottle compartment.
- Place the gas bottles in vertical position in the gas bottle compartment.
- Fasten the gas bottles so that they are unable to turn or tilt.
- Connect the gas tube to the gas bottle without tension.
- If the gas bottles are not connected to the gas tube, always place the protective cap on top.
- Close the regulator tap on the gas bottle before the gas pressure regulator or gas tube are removed from the gas bottle.
- Depending on the connection, unscrew the gas tube from the gas bottle and screw it on the gas bottle again by hand or using an suitable special spanner. The screw connection on the gas bottle generally has a left-hand thread. **Do not** tighten too firmly.
- Only use special gas pressure regulators with a safety valve designed for vehicle use. Other gas pressure regulators are not permitted and cannot meet the demanding requirements.
- Use the gas pressure regulator defroster if the temperature falls below 5 °C.

- ▶ Use only 11 kg or 5 kg gas bottles. Camping gas bottles with built-in check valve (blue bottle with max. 2.5 or 3 kg content) are can be used in exceptional cases with a safety valve.
- ▶ Use the shortest possible tube lengths (150 cm max.) for external gas bottles.
- ▶ Never block the floor ventilation openings below the gas bottles.

- ▷ The screw connections on the gas bottles generally have a left-hand thread.
- ▷ For gas-operated units the gas pressure must be reduced to 30 mbar.
- ▷ Connect gas pressure regulator complete with safety valve directly to bottle valve.

  The gas pressure regulator reduces the gas pressure in the gas bottle down to the operating pressure of the gas devices.
- ▷ For filling and connecting the gas bottles in Europe the accessories shops have corresponding Euro filling sets and Euro bottle sets.
- ▷ Information available at the dealers or service centre.

## 8.3 DuoControl regulating system

- ▷ The regulating system and the hose lines shall be changed at the latest 10 years after manufacturing date. The operator is responsible for this.
- ▷ Also read the manufacturer's instruction manual.

DuoControl is a safety gas pressure regulating system with automatic switching for a two-bottle gas system. The DuoControl regulating system automatically switches the gas supply from the primary bottle to the reserve bottle as soon as the primary bottle is either empty or no longer ready for operation. The gas appliances may still continue operation. The DuoControl regulating system is suitable for all commercial gas bottles with liquefied gas (propane/butane) and a pressure of 0.6 bar to 16 bar.

The DuoControl regulating system ensures a constant gas pressure for the gas-operated devices, no matter which gas bottle is supplying the gas.

In the case of vehicles with a DuoControl regulating system, the operation of gas-operated devices is allowed during the journey in all of Europe.

In the event of an accident, the crash sensor in the DuoControl regulating system will interrupt the gas flow.

The gas bottles are connected via high pressure hoses. A hose break guard prevents gas leakage in the event of a damaged hose.

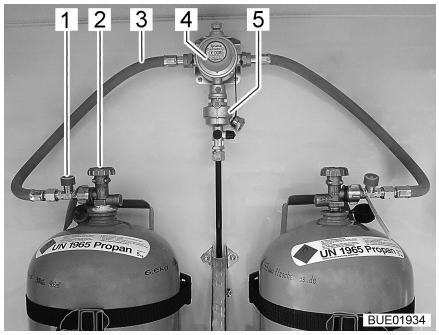


Fig. 39 Gas bottles with DuoControl

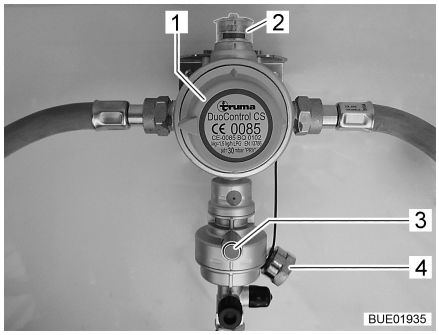


Fig. 40 DuoControl regulating system

**Construction of the unit**

The DuoControl regulating system consists of a reversing valve (Fig. 39,4) and a crash sensor (Fig. 39,5). The DuoControl regulating system is installed between the gas tubes (Fig. 39,3) with hose break guard (Fig. 39,1). The knob (Fig. 40,1) on the reversing valve is used to select which of the gas bottles is to be used as primary bottle and which is to be used as reserve bottle.

The status of the gas supply is indicated in the inspection window (Fig. 40,2):

- Green: Gas is taken out of the primary bottle.
- Red: Gas is taken out of the reserve bottle.

The operation with only one gas bottle is allowed but in this case the open connection must be closed with a blind cover (Fig. 40,4).

**Crash sensor**

The crash sensor blocks the gas supply in the event of a significant impact (e.g. accident). The crash sensor is put into operation with the green reset button (Fig. 40,3).

**Hose break guard**

The hose break guard (Fig. 39,1) blocks the gas flow if the connected hose breaks. The hose break guard must be activated by pressing the green button.

**Defroster**

The DuoControl regulating system can be heated (defroster). If winter operation is set at the operating unit, the DuoControl regulating system will be heated automatically. Thus, faults of the gas system due to frost in winter are prevented.

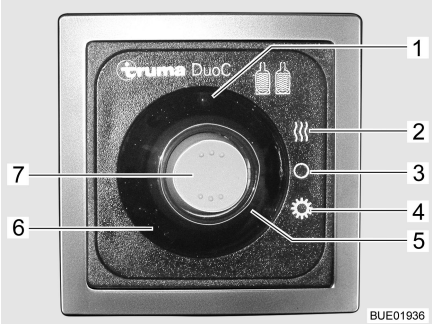


Fig. 41 DuoControl operating unit

1 Yellow indicator lamp, defroster
2 Winter operation position
3 OFF position
4 Summer operation position
5 Red indicator lamp, primary bottle empty
6 Green indicator lamp, supply from primary bottle
7 Rocker switch

**Operating unit**

At the operating unit (Fig. 41), the gas supply via the DuoControl regulating system is switched on and off. The regulator taps (Fig. 39,2) of the gas bottles and the gas isolator taps of the devices must be opened manually.

Summer and winter operation are switched with the rocker switch (Fig. 41,7) on the operating unit.

The two indicator lamps on the operating unit indicate the level of the primary bottle. When the green indicator lamp (Fig. 41,6) is lit, the primary bottle is sufficiently filled. When the red indicator lamp (Fig. 41,5) illuminates, the primary bottle is empty. In this case, the reserve bottle is used for the gas supply.

*Putting into operation:*

- Connect the gas bottles.
- Use the knob (Fig. 40,1) on the reversing valve to select the gas bottle which is to be the primary source of gas (primary bottle). Always turn the knob as far as it will go.
- Open regulator taps (Fig. 39,2) on the gas bottles.
- Press the green button of the hose break guard (Fig. 39,1). The green marking is shown in the inspection window (Fig. 40,2).

*Switching on summer/ winter operation:*

- Switch on the DuoControl regulating system at the operating unit (Fig. 41). To do so, set the rocker switch (Fig. 41,7) to winter operation (Fig. 41,2) or to summer operation (Fig. 41,4). The yellow defroster indicator lamp (Fig. 41,1) is lit when winter operation is selected.

*Switching off:*

- Set the rocker switch (Fig. 41,7) to the OFF position (Fig. 41,3). The indicator lamps go out.
- Close regulator taps (Fig. 39,2) on the gas bottles.

**Changing gas bottles**

- ▶ When changing gas bottles, do not smoke or create any open fire.
- ▶ When you have changed the gas bottle, check whether gas escapes at the connection points and unions. Use a leakage search spray to spray the relevant connection point or union. These agents are available at the accessories shop.

If the green indicator lamp (Fig. 41,6) goes out during operation and the red indicator lamp (Fig. 41,5) lights up, the primary bottle is empty and must be changed. The red marking is shown in the inspection window (Fig. 40,2). The reserve bottle continues supplying the gas appliances with gas.

You may also change an empty gas bottle while gas-operated devices are in operation.

*Changing the gas bottle:*

- Turn the knob (Fig. 40,1) a half turn in the direction of the currently used gas bottle. In this way, this gas bottle is the primary bottle now, and the empty gas bottle becomes the reserve bottle. The marking in the inspection window (Fig. 40,2) changes from red to green.
- Close regulator tap (Fig. 39,2) on the empty gas bottle. Pay attention to the direction of the arrow.
- Unscrew the gas tube from the empty gas bottle.
- Release the fixing belts and remove the empty gas bottle.
- Place a filled gas bottle in the gas bottle compartment and retain with the fixing belts.
- Connect the filled gas bottle to the gas tube.
- Open the regulator tap on the gas bottle.
- Press the green button of the hose break guard (Fig. 39,1).

## 8.4 Changing gas bottles

- ▶ If the vehicle is equipped with a DuoControl regulating system, change the gas bottles according to the instructions in section 8.3.
- ▶ When changing gas bottles, do not smoke or create any open fire.
- ▶ When you have changed the gas bottle, check whether gas escapes at the connection points and unions. Use a leakage search spray to spray the relevant connection point or union. These agents are available at the accessories shop.

▷ The procedure described below applies to vehicles that are equipped with a single gas connection. If the vehicle is equipped with an regulating system: when changing the gas bottle, proceed as described for the regulating system.

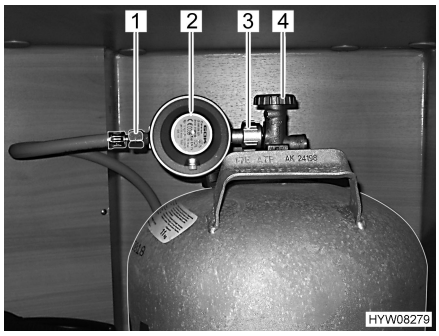


Fig. 42 Gas bottle connection

- Open flap for the gas bottle compartment.
- Close the regulator tap (Fig. 42,4) on the gas bottle. Pay attention to the direction of the arrow.
- Hold the gas pressure regulator (Fig. 42,2) and open the knurled nut (Fig. 42,3).
- Remove the gas pressure regulator and the gas tube (Fig. 42,1) from the gas bottle.
- Release the fixing belts and remove the gas bottle.
- Place a filled gas bottle in the gas bottle compartment.
- Fix gas bottle in place with the fixing belts.
- Position the gas pressure regulator (Fig. 42,2) and the gas tube (Fig. 42,1) on the gas bottle and tighten the knurled nut (Fig. 42,3).
- Close flap for the gas bottle compartment.

## 8.5 Gas isolator taps

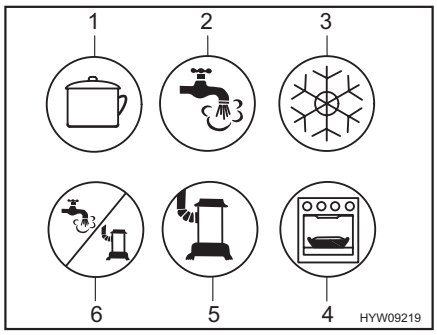


1 Cooker
2 Hot water
3 Refrigerator
4 Oven/grill
5 Heater
6 Hot water/heater

Fig. 43 Possible symbols for the gas isolator taps

A gas isolator tap (Fig. 43) for every gas device is built into the vehicle. The gas isolator taps can be found under the cooker.

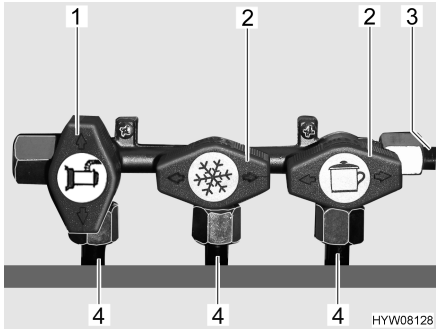


1 Gas isolator tap open
2 Gas isolator tap closed
3 Gas pipe
4 Pipe to the gas appliance

Fig. 44 Gas shut-off valves position (example)

*Opening:*
- Position the gas isolator tap of the corresponding appliance parallel (Fig. 44,1) to the pipe (Fig. 44,4) leading to the gas appliance.

*Closing:*
- Position the gas isolator tap of the corresponding appliance transverse (Fig. 44,2) to the pipe (Fig. 44,4) leading to the gas appliance.

## Chapter overview

This chapter contains instructions regarding the electrical system of the vehicle.

The instructions address the following topics:

- safety
- explanations of terms relating to the battery
- 12 V power supply
- installing an inverter
- starter battery
- living area battery
- transformer/rectifier
- panel
- 240 V power supply
- connection to the 240 V power supply
- fuse rating
- electrical wiring

The operation of the electrical appliances of the housing body is described in chapter 10.

## 9.1 General safety instructions

▶ Only allow qualified personnel to work on the electrical system.

▶ All electronic devices (e.g. mobile telephones, radios, televisions or DVD players) which have been retrofitted to the vehicle and are operated during the journey must have certain features: These are the CE certification, the EMC inspection (electromagnetic compatibility) and the "e"-inspection.

Only in this way can the functional reliability of the vehicle be ensured. Otherwise the airbag may be triggered or interference to the on-board electronics may result.

▷ After the vehicle is started, delays to the output or forwarding of electrical impulses are possible.

The control unit of the basic vehicle does not release the D+ signal until the engine has reached full performance. In the event of a cold start in winter, this can take up to 15 seconds.

For this reason, output of warning signals (such as "entrance step extended") may sometimes be delayed.

The automatic retraction of a SAT antenna can also be delayed.

▷ During a storm, to protect the electrical devices disconnect the 240 V connection and retract the antennae.

## 9.2 Terms

**Off-load voltage**

The off-load voltage is the voltage of the battery in idle condition, i.e. no current is consumed and the battery is not being charged.

▷ The battery must remain idle for a while before measuring. After charging the last time, or after the last current has been drained by appliances, wait approximately 2 hours before measuring the off-load voltage.

**Closed circuit current**

Some electrical appliances, such as the clock and the indicator lamps, require continuous electric current, for this reason they are referred to as inactive appliances. This closed circuit current flows even if the device has been switched off.

**Total discharge**

Total discharge of the battery is imminent, if a battery is completely discharged by an active appliance and by closed circuit current and the off-load voltage falls below 12 V.

▷ Total discharge damages the battery.

**Capacity**

Capacity refers to the amount of electricity which can be stored in a battery.

The capacity of a battery is given in ampere hours (Ah). The so-called K20 value is normally used.

The K20 value indicates how much current a battery is able to dispense over a time period of 20 hours without causing damage, or how much current is required to charge a flat battery within 20 hours.

For example, if a battery can dispense 4 amps for 20 hours, then it has a capacity of 4 A x 20 h = 80 Ah.

If more current flows, the discharging time of the battery will decrease proportionately.

External influences, such as temperature and age may alter the storage capacity of the battery. Capacity details refer to new batteries operating at room temperature.

▷ Depending on battery technology, capacity details have a conversion factor of 1.3 to 1.7, which lowers the real capacity by this value.

## 9.3 12 V power supply

### 9.3.1 Installation of inverter

▷ Retrofitting of an inverter can lead to damage to the electrical system. We will not be held liable for this damage.

The installation of a 240 V inverter results in a very high current load. For example an inverter with a power output of 800 W on the 12 V side has a current consumption of up to 75 A.

This current is much too big for the outputs on the transformer (see section 9.7.1).

If the inverter is connected directly to the battery, the current consumption of the inverter will not be indicated by panel. The display shows incorrect values. Due to the high discharging current, the terminal voltage in the battery drops significantly. The measuring system installed then detects undervoltage and could switch off the 12 V power supply. In addition the living area battery will be drained very quickly if an inverter is used. It is not possible to gain sufficient charge via the vehicle's alternator or the transformer.

### 9.3.2 Starter battery

The starter battery serves for starting the engine and supplies the electrical appliances of the base vehicle as well as optional devices such as the radio, navigation system or central locking system with voltage.

**Position**

The starter battery is fitted in the footwell of the driver's cabin under the floor plate.

**Discharging**

This section contains information regarding the discharge of the starter battery.

▷ Total discharge damages the battery.

▷ Recharge battery in good time.

The starter battery will be totally discharged via a closed circuit current (inactive appliances). Inactive appliances are optional devices such as a radio, alarm system, navigation system or a central locking system. Inactive appliances discharge the starter battery when the vehicle engine is switched off.

Low temperatures outside reduce the capacity available.

**Charging**

This section contains information regarding the charging of the starter battery.

▶ The acid in the battery is poisonous and corrosive. Any contact with the skin or the eyes is to be avoided. In the event of contact, rinse immediately with plenty of water (skin, eyes, clothes, objects) and seek medical attention if necessary.

▶ In the case of charging with an external charger there is danger of explosion. Sparks can be caused by attaching the battery terminals. Only charge the battery in a well ventilated area and away from naked flames or possible sources of sparks. Batteries can develop and release gases when they are charged.

▷ Before a temporary lay-up, charge the battery fully.

▷ Do not connect the battery cables to the wrong poles (red cable -> positive pole, black cable -> negative pole).

▷ If the starter battery or living area battery are disconnected, do not apply the ignition. There is a danger of short circuit from exposed cable ends.

▷ Before disconnecting or connecting the terminals of the battery, switch off the vehicle engine as well as the 240 V and 12 V power supplies and all appliances. Danger of short circuit!

▷ Observe the instruction manuals for the base vehicle and the charger.

The starter battery can only be fully charged with an external charger. When the vehicle is connected to the 240 V power supply, the transformer/rectifier charges the starter battery with a float charge only. Even in mobile operation, the vehicle engine alternator is not capable of completely charging the starter battery.

When charging the starter battery with an external charger, proceed as follows:

- Turn off the vehicle engine.
- Switch off the 12 V power supply on the panel. The indicator lamps or the displays on the panel go out.

- Switch off all gas appliances, all gas isolator taps and close the regulator tap on the gas bottle.
- Disconnect the starter battery from the vehicle (e.g. remove the battery terminals). There is a danger of short circuit when disconnecting the battery poles. For this reason, first disconnect the negative terminal on the starter battery and then the positive.
- Check that the external charger is turned off.
- Connect the external charger to the starter battery. Pay attention to the polarity: First connect the positive terminal "+" to the positive terminal of the starter battery, then connect the negative terminal "–" to the negative pole of the starter battery.
- Switch on the external charger.
- See the instructions for use of the connected charger for information concerning charge period required for the battery.
- See the specifications on the battery for information concerning its strength.
- Disconnect the charger in reverse order (the negative terminal first).
- Connect the battery terminals again (first the positive terminal).

### 9.3.3 Living area battery

▷ The living area battery may not be opened.

▷ Use only the built-in transformer/rectifier to load the living area battery.

▷ Prior to commencing a journey ensure the living area battery is fully charged. For this reason charge the living area battery for at least 20 hours before commencing the journey.

▷ During the trip, use every opportunity to charge the living area battery.

▷ After the trip, charge the living area battery fully.

▷ Before a temporary lay-up, charge the battery fully.

▷ When the living area battery is changed, only use batteries of the same type and the same capacity.

▷ When changing the living area battery, use only batteries for which there are charging characteristics available. After changing the battery the charging characteristics must be adjusted at the transformer/rectifier or at the auxiliary charging unit.

▷ If there are several living area batteries, always change all the batteries together. The batteries must **always** be the same age and have the same capacity.

▷ When changing the living area battery, use only batteries which meet the minimum capacity of the charger. Observe the separate instruction manual for the charger. Lower-capacity batteries will generate a great deal of heat when they are charged. Danger of explosion!

▷ If the living area battery is replaced and the charging unit does not provide at least 10 % of the rating of a new battery, install an auxiliary charging unit. Example: With a battery capacity of 80 Ah, the charging unit must supply at least 8 A charging current.

▷ Before disconnecting or connecting the terminals of the battery, switch off the vehicle engine as well as the 240 V and 12 V power supplies and all appliances. Danger of short circuit!

- ▷ If the starter battery or living area battery are disconnected, do not apply the ignition. There is a danger of short circuit from exposed cable ends.
- ▷ Only connect devices with a maximum of 10 A to the sockets of the 12 V power supply.
- ▷ If there are two living area batteries: When changing, ensure that the batteries are properly installed. Install the batteries so that the positive terminal on one battery is lying next to the negative terminal of the other battery.
- ▷ If there are two living area batteries: When changing, ensure that the batteries are properly connected.

When the vehicle is not connected to the 240 V power supply or the 240 V power supply is switched off, the living area battery supplies the living area with 12 V DC. The living area battery has a limited power supply only. For this reason, electrical appliances such as the radio and the lights should not be operated for a long time without using the 240 V power supply.

**Position**

The living area battery is installed behind the bench, underneath the cabinet underneath the storage flap.

**Discharging**

The living area battery is discharged by the closed circuit current which some electrical appliances continuously require.

- ▷ Total discharge damages the battery.
- ▷ Recharge battery in good time.

Even a fully charged living area battery can, after an extended period, be fully discharged via a closed-circuit current (inactive appliances).

Low temperatures outside reduce the capacity available.

The self-discharge rate of the battery is also dependant on temperature. At 20 to 25 °C the self-discharge rate is approx. 3 % of the capacity per month. The self-discharge rate will increase with rising temperatures: At 35 °C the self-discharge rate is approx. 20 % of the capacity per month.

An older battery no longer has the complete capacity available.

The higher the number of active electrical appliances, the faster the energy of the living area battery is consumed.

**Charging**

Only use the transformer/rectifier to charge the living area battery. Therefore, connect the vehicle to a 240 V power supply system as often as possible.

- ▷ Charge the battery for at least 48 hours after a total discharge.

### 9.3.4 Energy balance of the living area battery

The living area battery has a limited power supply only. For this reason, the electrical appliances should not be operated without a 240 V power supply for a longer period of time.

## 9.4 Transformer/rectifier (EBL 30)

▷ Do not cover the ventilation slots. Danger of overheating!

▷ Depending on the model, not all slots for the fuses are occupied.

▷ Further information can be obtained in the manufacturer's instruction manual.

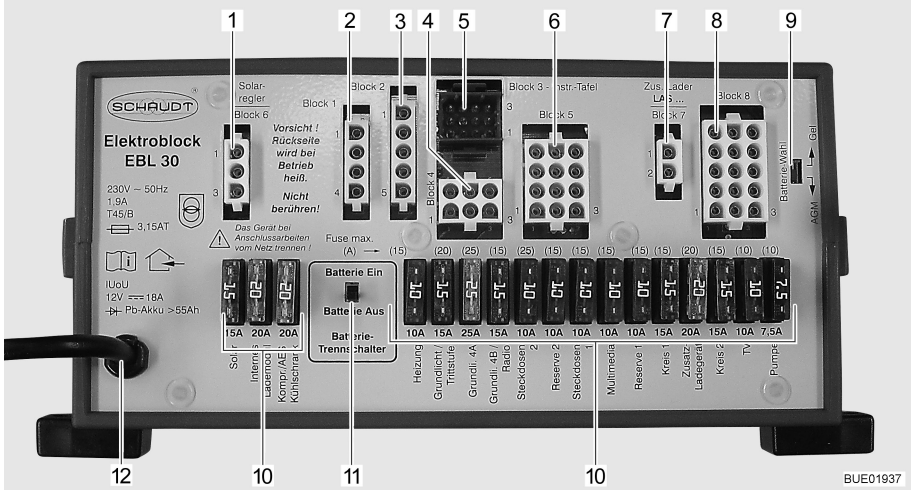


Fig. 45 Transformer/rectifier (EBL 30)

1 Block 6: Solar charge regulator (if fitted)
2 Block 1: Refrigerator
3 Block 2: Refrigerator power supply D+, battery sensor/control lines
4 Block 4: Heating, basic light (lighting in the entrance area), entrance step
5 Block 3: Panel
6 Block 5: Reserve 2, sockets, basic light
7 Block 7: Auxiliary charging unit
8 Block 8: Appliances, TV, water pump, reserve 1, multimedia, sockets
9 Battery selector switch (Gel/AGM)
10 Fuses
11 Battery cut-off switch ("Batterie Ein/Aus" (battery On/Off))
12 Mains connection 240 V~

**Functions** The transformer/rectifier has the following functions:

- The transformer/rectifier charges the living area battery. The transformer/rectifier charges the starter battery with a float charge only.
- The transformer/rectifier monitors the voltage in the living area battery.
- The transformer/rectifier distributes the current to the 12 V circuits and secures them. Devices with a maximum of 10 A can be connected to the sockets.
- The transformer/rectifier provides connections for a solar charge regulator, an auxiliary charging unit, as well as other control and monitoring functions.
- When the vehicle engine is turned off, the transformer/rectifier separates the starter battery electrically from the living area battery. This prevents the 12 V living area appliances from discharging the starter battery.
- The battery cut-off switch in the transformer/rectifier separates all the appliances from the living area battery.

The transformer/rectifier only works in conjunction with a panel.

The power in the transformer/rectifier (> 18 A) is divided into charging current and current to the appliances. The charging current is always just the portion that is not being used by any appliances. If the current to the appliances exceeds the current available, then the living area battery is discharged.

**Position** The transformer/rectifier is located inside the seat console below the driver's seat.

### 9.4.1 Battery cut-off switch

The battery cut-off switch switches off **all** the appliances in the living area, even inactive ones. Even appliances such as the entrance step, basic lighting or the refrigerator will stop working. This prevents the living area battery from slowly discharging if the vehicle is not used for a longer period of time (e.g. temporary lay-up).

If the vehicle is connected to the 240 V power supply, the batteries can then be charged from the transformer/rectifier, even if the battery cut-off switch is switched off.

### 9.4.2 Battery selector switch

▶ If the battery selector switch is set incorrectly, there is the danger of the formation of detonating (oxy-hydrogen gas). Danger of explosion!

▷ Incorrect setting of the battery selector switch damages the living area battery.

▷ The factory settings of the battery selector switch must not be changed.

### 9.4.3 Battery monitor

▷ You must fully recharge a discharged living area battery as soon as possible.

The battery monitor in the transformer/rectifier monitors the voltage in the living area battery.

If the battery voltage falls below 10.5 V, the battery monitor in the transformer/rectifier switches off all the 12 V appliances.

*Measures:*

- Switch off all electrical appliances that are not absolutely essential at the corresponding switch.
- If necessary, use the 12 V main switch to switch the 12 V power supply back on for a short while. This is only possible, however, when the battery voltage is above 11 V. If the voltage is below this level, the 12 V power supply cannot be switched on again until the living area battery has been recharged.

### 9.4.4 Charging the battery

When the vehicle engine is running, a relay in the transformer/rectifier alternator switches on the living area battery and the starter battery together and recharges them with the vehicle generator. When the vehicle engine is switched off, the batteries are automatically disconnected from one another again by the transformer/rectifier. This prevents the starter battery from being run down by electrical appliances in the living area. The starting capability of the vehicle is thus preserved. The terminal voltage of the living area battery or the starter battery can be read on the panel.

If the vehicle is connected to the 240 V power supply, the living area battery and the starter battery are automatically charged by the charger module on the transformer/rectifier. The starter battery is only charged with a float charge. The charging current is adapted to suit the charging condition of the battery. This ensures that it is not possible to overload the battery.

To make use of the maximum output from the charger module on the transformer/rectifier, switch off all electrical appliances during charging.

## 9.5 Panel (LT 99)

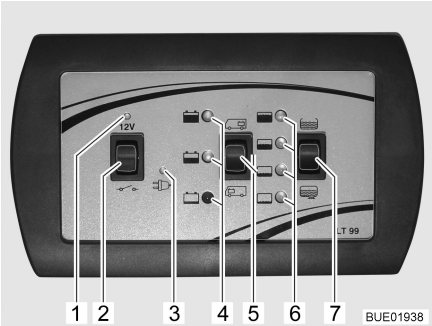


Fig. 46 Panel (LT 99)

1 12 V indicator lamp
2 12 V main switch
3 240 V indicator lamp
4 Battery charging condition indicator
5 Rocker switch for battery display
6 Tank volume indicator
7 Rocker switch for tank level indicator

### 9.5.1 12 V main switch

The 12 V main switch (Fig. 46,2) switches the 12 V power supply of the living area on and off.

Exception: Depending on the model, safety/drainage valve, heater, basic light (lighting in the entrance area), entrance step and spare 4 remain ready to operate.

*Switching on:*

- Press the upper part of the rocker switch (Fig. 46,2) "12 V": The 12 V living area power supply is switched on. The 12 V indicator lamp (Fig. 46,1) lights up in green.

*Switching off:*

- Press the lower part of the rocker switch (Fig. 46,2) "⊸⊸": The 12 V living area power supply is switched off. The 12 V indicator lamp (Fig. 46,1) goes off.

▷ When leaving the vehicle, switch off the main 12 V power supply at the panel. This prevents any unnecessary discharge of the living area battery.

▷ Appliances such as the safety/drainage valve, charger, solar charge regulator and panel consume approx. 20 mA to 65 mA of electricity from the battery capacity, even when the 12 V main switch is turned off. Therefore disconnect the living area battery from the 12 V power supply, if the vehicle will not be used for a long period of time.

### 9.5.2 Charging condition of the batteries

The rocker switch for the battery display (Fig. 46,5) can be used to check the charging condition of the living area battery or starter battery.

*Displays:*

- Press the upper part of the rocker switch (Fig. 46,5) "": The charging condition of the living area battery is displayed.
- Press the lower part of the rocker switch (Fig. 46,5) "": The charging condition of the starter battery is displayed.

After the rocker switch is pressed, either the red, yellow or green indicator lamps (Fig. 46,4) light up.

The displays are explained in the table below:

**Instructions on the charging condition of the battery**

| LED indicator | Mobile operation (vehicle moving, no 240 V connection) | Battery operation (vehicle stationary, no 240 V connection) | Power operation (vehicle stationary, 240 V connection) |
|---|---|---|---|
| Red<br>Danger of total discharge | 12 V power supply overload<br>The battery is not charged by the alternator, the alternator's regulator is defective | Battery flat | 12 V power supply overload<br>The battery is not charged by the transformer/rectifier, the transformer/rectifier is defective |
| Yellow | Battery is weakly charged or 12 V power supply overload [1)]<br>The battery is not sufficiently charged by the alternator, the alternator's regulator is defective [1)] | Battery weakly loaded or heavily drained | Battery is weakly charged or 12 V power supply overload [1)]<br>The battery is not sufficiently charged by the transformer/rectifier, the transformer/rectifier is defective [1)] |
| Green | Battery being charged | Battery fully charged | Battery being charged |

[1)] If the display does not change for several hours.

▷ Total discharge causes irreparable damage to the battery.

### 9.5.3 Filling level of the tanks

The rocker switch for the tank level display (Fig. 46,7) can be used to check the level of the water tank or the waste water tank.

*Displays:*

- Push the rocker switch (Fig. 46,7) up "": The level of the water tank is displayed.
- Push the rocker switch (Fig. 46,7) down "": The level of the waste water tank is displayed.

After the rocker switch is pressed, an indicator lamp (Fig. 46,6) lights up.

LED with the symbol "" lights up: Tank full or almost full

LED with the symbol "" lights up: Tank approx. 3/4 full

LED with the symbol "" lights up: Tank approx. 1/2 full

LED with the symbol "" lights up: Tank approx. 1/4 full

No LED lights up: Tank empty

### 9.5.4 240 V indicator lamp

The yellow 240 V indicator lamp (Fig. 46,3) illuminates whenever line voltage is available at the transformer/rectifier input.

## 9.6 240 V power supply

- ▶ Only allow qualified personnel to work on the electrical system.
- ▶ Have the vehicle's electrical system checked by a qualified electrician at least once every 3 years. If the vehicle is used frequently, an annual check is recommended.

The 240 V power supply provides electricity for:

- sockets with earth contact for appliances with maximum 16 A
- refrigerator
- transformer/rectifier

The electrical appliances connected to the 12 V power supply of the living area are supplied with voltage by the living area battery.

Connect the vehicle to an external 240 V power supply system as often as possible. The charger module in the transformer/rectifier automatically charges the living area battery. In addition to this, the starter battery is charged with a float charge of 2 A.

### 9.6.1 240 V connection

▷ Overvoltage can damage connected devices. Overvoltage can be caused by lightning, irregular voltage sources (e.g. petrol-operated generators) or power connections on ferries for example.

**Requirements concerning the 240 V connection**

- The connecting cable, the plug connectors at the point of supply and the plug connector to the vehicle must comply with IEC 60309. The standard designation for the plug connectors is "CEE blue".
- Use H07RN-F rubber sheathed cable with a minimum cable cross-section of 2.5 mm² and a maximum length of 25 m.
- Earth contact connectors (safety) are not permitted. The interconnection of CEE/safety adapters is also prohibited.

### 9.6.2 Connecting the 240 V power supply

- ▶ The external 240 V power supply must be protected by fuse with a fault current protection switch (FI-switch, 30 mA).
- ▶ To prevent overheating, the cable must be fully uncoiled from the cable reel.
- ▶ In case of doubt or if the 240 V supply is not available or is faulty, contact the operator of the power supply device.

- ▷ The 240 V connection in the vehicle is equipped with a fault current protection switch (FI-switch).
- ▷ For the connection points on camp sites (camping distributors) fault current protection switches (FI-switches, 30 mA) are obligatory.

The vehicle can be connected to an external 240 V power supply.

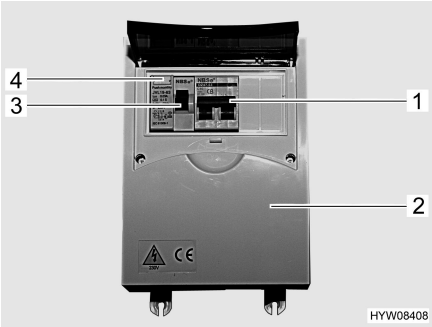


Fig. 47 240 V fuse box with safety cut-out and FI-switch

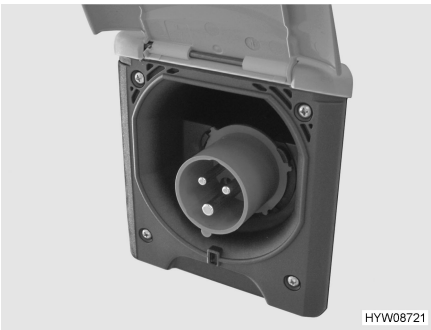


Fig. 48 240 V connection on vehicle

*Connecting the vehicle:*

- Check whether the power supply device is suitable regarding connection, voltage, frequency and current.
- Check whether the cables and connections are suitable.
- Check the plug connectors and cables for visible damage.
- Switch off the safety cut-out (Fig. 47,1) in the fuse box (Fig. 47,2).
- Open the cover of the 240 V connection on the vehicle (Fig. 48) and insert the plug connector. Ensure that the detent of the spring-mounted pivoting cover is engaged in position.
- Plug the connector of the connecting cable into the socket of the camping distributor. Ensure that the detent of the spring-mounted flap is also engaged here.
- Switch on the safety cut-out in the fuse box.

*Checking the fault current protection switch:*

- When the vehicle is connected to the 240 V supply, press the test button (Fig. 47,4) of the fault current protection switch (FI-switch) (Fig. 47,3) in the fuse box (Fig. 47,2). The fault current protection switch must trip.
- Switch the fault current protection switch (Fig. 47,3) back on again.

*Unplugging the connection:*

- Switch off the safety cut-out (Fig. 47,1) in the fuse box (Fig. 47,2).
- Loosen the detent on the camping distributor and unplug the connecting cable from the socket.
- Loosen the detent on the vehicle, unplug the plug connector and close the cover of the 240 V connection.

## 9.7 Fuses

- ▶ Only replace defective fuses when the cause of the defect is known and has been remedied.
- ▶ Replace defective fuses only after the power supply has been turned off.
- ▶ Never bridge or repair fuses.
- ▶ Only replace faulty fuses with a new fuse with the same rating.

### 9.7.1 12 V fuses

The appliances connected to the 12 V power supply in the living area are fused individually. The fuses are accessible at different positions in the vehicle.

Before changing fuses, take the function, value and colour of the relevant fuses from the following specifications. When changing fuses, only use flat fuses with the values shown below.

**Fuses on the starter battery**

The fuses are installed in the vicinity of the starter battery.

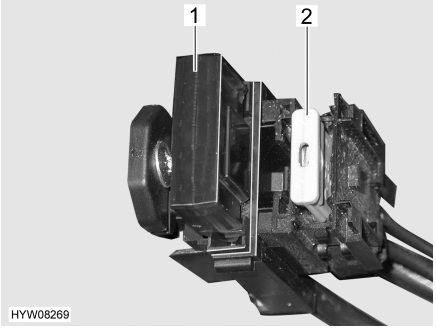


Fig. 49 Fuses on the starter battery

1 Jumbo flat fuse 40 A/orange (for the transformer/rectifier)
2 Flat fuse 15 A/blue (for refrigerator and charging line)

**Fuses on the living area battery**

The fuses are installed in the vicinity of the living area battery.

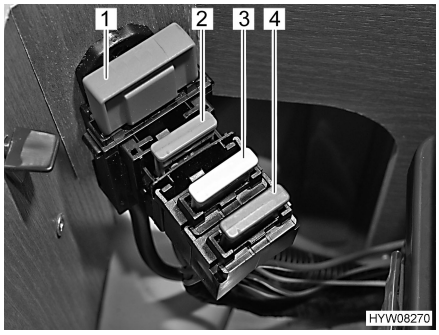


Fig. 50 Fuses on the living area battery

1 Jumbo flat fuse 40 A/orange (for the transformer/rectifier)
2 Flat fuse 2 A/grey (for battery sensor, living area battery)
3 Flat fuse 20 A/yellow (for special equipment: heating)
4 Flat fuse 15 A/blue (for special equipment: heating switch)

**Fuses on the relay box AD01**

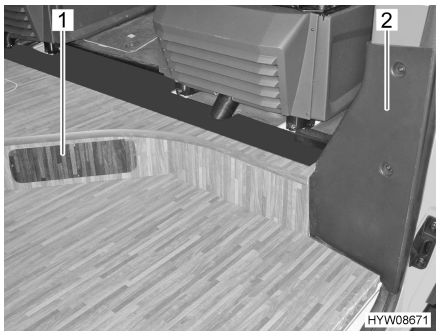


Fig. 51 Cover for relay box AD01

The relay box AD01 is installed behind a cover (Fig. 51,1) in the raised floor.

| FuNo | Function | Value/colour |
|---|---|---|
| B2 | Cl. 15 (ignition on) | 15 A blue |
| B3 | Cl. 30 (constant positive) | 15 A blue |
| B5 | Signal D+ | Internal Polyswitch (2 A) |
| B6 | Spare (additional heater) | 15 A blue |
| B7 | Lamps | 5 A light brown |

**Fuse for the Thetford toilet (swivel toilet)**

The toilet has a maintenance-free fuse which resets automatically.

**Fuses on the transformer/rectifier EBL 30**

| Function | Value/colour |
|---|---|
| Solar charger module | 15 A blue |
| Internal charger module | 20 A yellow |
| Refrigerator | 20 A yellow |
| Heater | 10 A red |
| Basic light/entrance step | 15 A blue |
| Basic light | 25 A matt |
| Basic light/radio | 15 A blue |
| 12 V sockets | 10 A red |
| Spare 2 | 10 A red |
| 12 V sockets | 10 A red |
| Multimedia | 10 A red |
| Spare 1 | 10 A red |
| Circuit 1 (light 1) | 15 A blue |
| Auxiliary charging unit | 20 A yellow |
| Circuit 2 (light 2) | 15 A blue |
| TV | 10 A red |
| Water pump | 7.5 A brown |

### 9.7.2 240 V fuse

▷ Check the fault current protection switch for each connection to the 240 V power supply, at least once every 6 months.

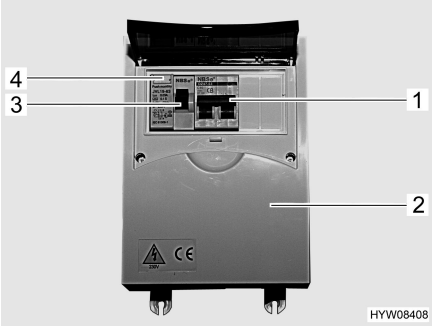


Fig. 52 240 V fuse box with safety cut-out and FI-switch

A fault current protection switch (FI-switch) (Fig. 52,3) in the fuse box (Fig. 52,2) protects the complete vehicle from fault current (0.03 A).

The downstream safety cut-out (10 A) (Fig. 52,1) secures the 240 V sockets, the refrigerator and the transformer/rectifier.


Fig. 53 Location of 240 V fuse box

**Position** The fuse box is built in under the driver's seat behind a cover.

*Checking the fault current protection switch:*

- When the vehicle is connected to the 240 V power supply, press the test button (Fig. 52,4). The fault current protection switch (FI-switch) must be activated.

## 9.8 Circuit diagrams

### 9.8.1 Block diagram 240 V

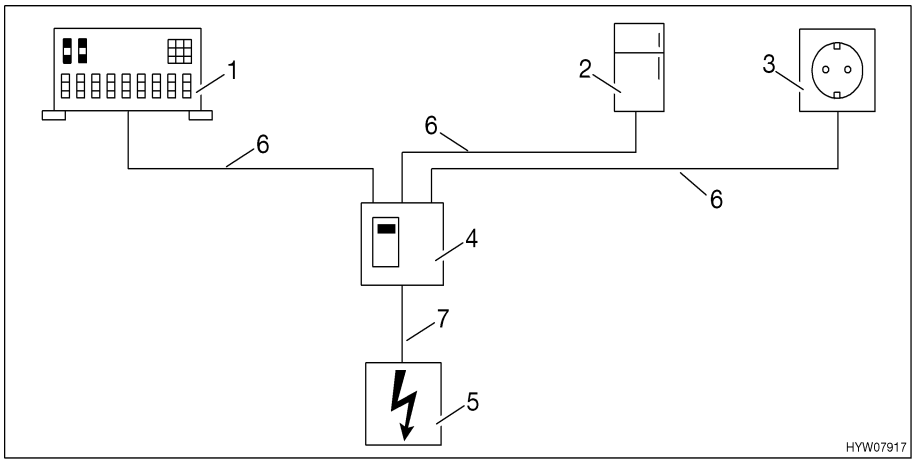


Fig. 54 240 V circuit diagram

1 Transformer/rectifier
2 Refrigerator
3 Sockets
4 Automatic circuit breaker
5 240 V connection
6 H05VV-F3G1,5$^2$bu/bn/gnye
7 3G2,5$^2$

Fig. 54 shows a schematic diagram of the 240 V network.

### 9.8.2 Block diagram 12 V

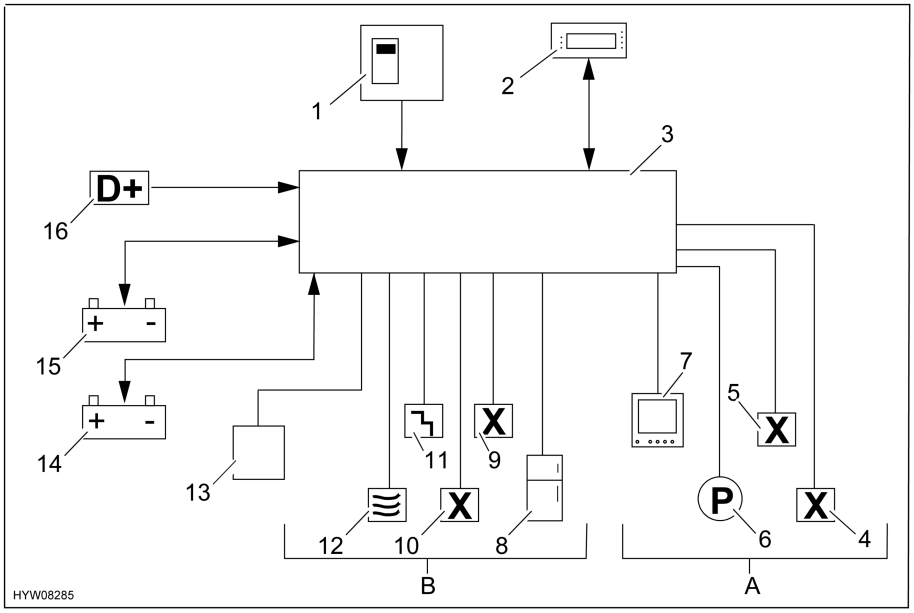


Fig. 55 12 V circuit diagram

| | |
|---|---|
| 1 | 240 V automatic circuit breaker |
| 2 | Panel with 12 V main switch |
| 3 | Transformer/rectifier |
| **A** | **Light, consumer circuits can be switched on/off via 12 V main switch** |
| 4 | Spare |
| 5 | Circuit, e.g. light |
| 6 | Water pump |
| 7 | TV set |
| **B** | **Basic supply** |
| 8 | Refrigerator |
| 9 | Spare (special equipment, e.g. defroster) |
| 10 | Basic light |
| 11 | Entrance step |
| 12 | Heater |
| 13 | Auxiliary charging unit |
| 14 | Living area battery |
| 15 | Starter battery |
| 16 | Constant positive (D+) |

Fig. 55 shows a schematic diagram of the 12 V network.

## Chapter overview

This chapter contains instructions regarding the appliances of the vehicle.

The instructions refer exclusively to the operation of the appliances.

Further information about the appliances can be found in the instruction manuals for the appliances, included separately with the vehicle.

The instructions address the following topics:

- heater
- boiler
- gas cooker
- refrigerator

## 10.1 General

▷ The heat exchanger of the Truma hot-air heater has to be replaced after 30 years. Only the manufacturer of the heater or an authorised specialist workshop is allowed to replace the heat exchanger. The operator of the heater must see to it that the parts are replaced.

▷ For safety reasons, spare parts for pieces of heating appliances must correspond with manufacturer's instructions and be permitted by the manufacturer as a spare part. These spare parts may only be fitted by the manufacturer or an authorised specialist workshop.

▷ Further information can be obtained in the instruction manual for the respective appliance.

The heater, boiler, cooker and refrigerator are fitted depending on the model of the vehicle.

In this instruction manual a description is given only for the operation of the appliances and their particular features.

To operate gas appliances, first open the regulator tap on the gas bottle and the gas isolator tap corresponding to the appliance.

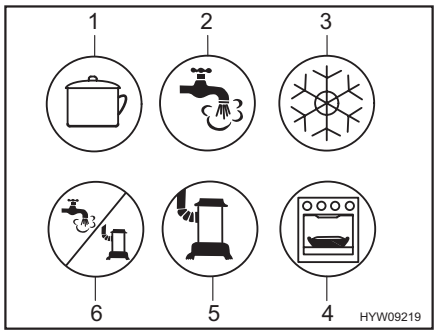


Fig. 56 Possible symbols for the gas isolator taps

1 Cooker
2 Hot water
3 Refrigerator
4 Oven/grill
5 Heater
6 Hot water/heater

## 10.2 Heater

- ▶ Never let gas escape unburned due to danger of explosion.
- ▶ When filling the fuel tank, on ferries or in the garage, never run the heater. Danger of explosion!
- ▶ Never operate the heater in gas operation in closed spaces (e.g. garages). Danger of poisoning and suffocation!
- ▶ Do not damage the exhaust gas pipe.

**Initial start-up**

When lighting the heater for the first time a small amount of smoke and odour will occur. Immediately set the operating switch of the heater to its highest position. Open doors and windows and ventilate well. Smoke and odour will disappear by themselves after a while.

### 10.2.1 To heat properly


Fig. 57 Air outlet nozzle of the hot-air heater

**Hot air distribution**

Several air outlet nozzles (Fig. 57) are built into the vehicle. Pipes conduct the warm air to the air outlet nozzles. Turn the air outlet nozzles in a suitable position so the air can escape as required. To avoid draft close the air outlet nozzles on the dashboard and set the air distribution of the base vehicle to air circulation.

**Adjusting the air outlet nozzles**

- Fully open: Full hot air stream
- Half or partially open: Reduced hot air stream

When five air outlet nozzles are completely opened, less warm air escapes through each nozzle. However, if only three air outlet nozzles are opened, more warm air flows out of each nozzle.

### 10.2.2 Truma Combi hot-air heater

- ▷ If there is a risk of frost and the heater is not in operation, empty the boiler.
- ▷ The circulation fan is automatically switched on when the hot-air heater is activated, and it stays on. This puts an immense strain on the living area battery, if the vehicle is not connected to an external 240 V power supply. Take into consideration that the living area battery only has limited reserves of energy.

- ▷ The hot-air heater can even run on an empty boiler.

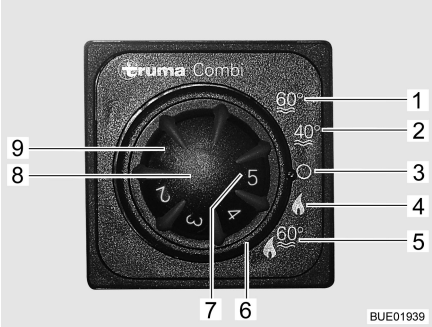


Fig. 58 Operating unit for heater/boiler

1 Summer operation water temperature 40 °C
2 Summer operation water temperature 60 °C
3 Off
4 Winter operation "Only heater"
5 Winter operation "Heater and production of hot water"
6 Rotary switch (external ring)
7 Indicator lamp "Heater operation" (green)
8 Knob for setting the heater temperature
9 Indicator lamp "Heating up period of production of hot water" (yellow)/ "Fault" (red)

**Operating modes**

All heaters have two operating modes:

- Winter operation
- Summer operation

It is only possible to heat the vehicle in the "Winter" operating mode. With the "Summer" operating mode only water in the boiler is heated. It is not possible to heat the vehicle in this operating mode.

*Selecting operating mode:*

- Set the operating mode using the rotary switch (Fig. 58,6).

The power supply of the heater cannot be interrupted by means of the 12 V main switch.

The heater is operated exclusively with gas.

**Winter operation**

The heater selects the necessary burner setting according to the required room temperature. When the required room temperature is reached, the burner is switched off. In "Heater and production of hot water" operating mode (Fig. 58,5) water in the boiler is also heated. In the operating mode "Only heater" (Fig. 58,4) the heater can be operated with an empty boiler.

*Switching on:*

- Open the regulator tap on the gas bottle and the gas isolator tap "Heater/ boiler".
- Turn the temperature control knob (Fig. 58,8) on the operating unit to the desired heating level.
- Set rotary switch (Fig. 58,6) to winter operation "Only heater" (Fig. 58,4) or to winter operation "Heater and production of hot water" (Fig. 58,5).

The green indicator lamp (Fig. 58,7) is on.

The circulation fan automatically switches on when the heater is activated.

*Switching off:*

- Set the rotary switch (Fig. 58,6) to "O" (Fig. 58,3).
- Close the gas isolator tap "Heater/boiler" and the regulator tap on the gas bottle.

After switching off the heater, the circulation fan may still run for a moment to use up the residual heat.

**Summer operation**

It is not possible to heat the vehicle in "Summer" operating mode. In "Summer" operating mode, only the water in the boiler is heated.

## 10.3 Boiler

- ▶ Never let gas escape unburned due to danger of explosion.
- ▶ Never run the boiler in gas operation when refuelling, on ferries or in the garage. Danger of explosion!
- ▶ Never operate the boiler in gas operation in closed spaces (e.g. garages). Danger of poisoning and suffocation!
- ▶ The water in the boiler can be heated up to 65 °C or 70 °C. Risk of scalding!
- ▶ Remove cap from exterior chimney before using the boiler.

- ▷ Never use boiler when empty.
- ▷ If the boiler is not being used, empty it if there is any risk of frost.
- ▷ Only operate the boiler with the maximum temperature setting if you require a large quantity of warm water. This protects the boiler against the build-up of limescale.
- ▷ Switch on the boiler and empty it if the vehicle is not used.

- ▷ Do not use the water from the boiler as drinking water.

### 10.3.1 Truma boiler

The boiler for water heating is integrated in the heater system and operates on gas. The boiler is operated with the operating unit.

**Analogue operating unit**

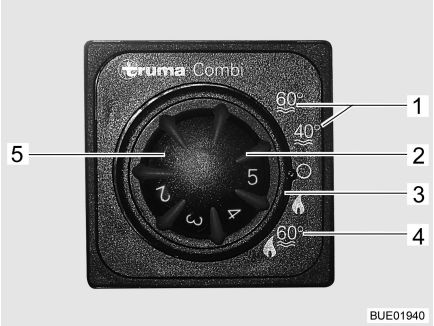


1 Summer operation water temperature 40 °C or 60 °C
2 Green indicator lamp "Operation"
3 Rotary switch
4 Winter operation "Heater and production of hot water"
5 Yellow indicator lamp "Boiler heating-up phase"

Fig. 59 Operating unit for heater/boiler

The boiler is operated exclusively with gas.

The boiler is switched on by turning the rotary switch (Fig. 59,3) on the operating unit (Fig. 59).

In winter operation "Heater and production of hot water" (Fig. 59,4) the water in the boiler is automatically heated up when the heater is switched on. If the heater switches off after the required room temperature has been reached, the boiler will continue to heat up until the set water temperature has been reached.

In summer operation (Fig. 59,1) only the water in the boiler is heated up to either 40 °C or 60 °C. The water is heated to 60 °C in approx. 25 minutes. The yellow indicator lamp (Fig. 59,5) illuminates during the boiler heating-up period.

The voltage supply for the boiler cannot be interrupted by an interruption to the 12 V supply on the panel.

*Switching on hot water production:*

- Open the regulator tap on the gas bottle and the gas isolator tap "Heater/boiler".
- Set the rotary switch (Fig. 59,3) on the operating unit (Fig. 59) to "Summer operation" (Fig. 59,1).

The yellow indicator lamp (Fig. 59,5) is illuminated during the heating up period. When the set water temperature is reached, the period of heating up is finished and the yellow indicator lamp fades.

*Switching off hot water production:*

- Set the rotary switch (Fig. 59,3) on the operating unit (Fig. 59) to "O".
- Close the gas isolator tap "Heater/boiler" and the regulator tap on the gas bottle.

**Safety/drainage valve**

The boiler is equipped with a safety/drainage valve (Fig. 60). The safety/drainage valve prevents water in the boiler from freezing, when there is frost and the heater is not switched on.

▷ When the vehicle is not used for a long period of time, open the safety/drainage valve and empty the boiler.

▷ At temperatures below 2 °C the safety/drainage valve opens automatically. Only if the temperature of the safety/drainage valve lies above 6 °C can it be shut again.

▷ The water pump and the water fittings are not protected against freezing by the safety/drainage valve.

▷ The drainage neck of the safety/drainage valve has to be free of dirt (e.g. leaves, ice) at all times.

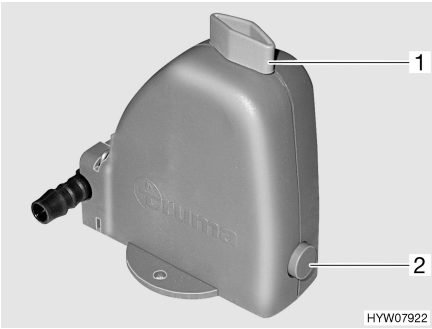


Fig. 60 Safety/drainage valve of the boiler

**Position**

See chapter 11, "Position of the drain cocks and safety/drainage valve" for the position of the safety/drainage valve.

**Filling/emptying the boiler**

The boiler can be supplied with water from the water tank.

*Filling the boiler with water:*

- Switch on the 12 V power supply on the panel.
- Close the safety/drainage valve. Turn the knob (Fig. 60,1) perpendicular to the safety/drainage valve and push the push button (Fig. 60,2) in.
- Set all the water taps to "Hot" and open them. The water pump is turned on. The warm water pipes are filled with water.

- Keep the water taps open until the water flowing out of the water taps has no bubbles in it. This is the only way to ensure that the boiler is full of water.
- Close all water taps.

*Emptying the boiler:*

- Switch off hot water production.
- Open the safety/drainage valve. To do this turn the knob (Fig. 60,1) parallel to the safety/drainage valve. The push button (Fig. 60,2) jumps out. The boiler is drained to the outside by the safety/drainage valve.
- Check whether the water has been drained completely from the boiler (approx. 10 litres).

▷ Further information can be obtained in the manufacturer's instruction manual.

▷ For further information on operation, see "Hot-air heater" section.

## 10.4 Gas cooker

- ▶ During operation of the gas cooker, do not leave the gas cooker unattended. Even if the gas cooker cannot be overseen for only a short time (e.g. Visit to the toilet), switch the gas cooker off.
- ▶ Never let gas escape unburned due to danger of explosion.
- ▶ Before using the cooker make sure that there is sufficient ventilation. Open windows or the skylight.
- ▶ Do not use the gas cooker for heating purposes.
- ▶ Always protect your hands with cooking gloves or potholders when handling hot pots, pans and similar items. There is a risk of injury!
- ▶ During activation and operation of the gas cooker, no flammable objects or highly inflammable objects such as dishcloths, napkins etc. must be near the gas cooker. Fire hazard!
- ▶ The process of ignition must be visible from above and must not be covered by cooking pans placed on the cooker.
- ▶ The gas cooker lid is held closed by a spring. When closing there is danger of getting injured!

▷ Do not use the glass gas cooker lid as a hob.

▷ Do not close the gas cooker lid while the gas cooker is in operation.

▷ Do not apply pressure on the gas cooker lid when it is closed.

▷ Do not place hot cooking pans on the gas cooker lid.

▷ Keep the gas cooker lid open after cooking until the burners are cool. Otherwise the glass plate could shatter.

▷ Only use pots and pans whose diameter is appropriate for the gas cooker burners.

▷ When the flame goes out, the thermocouple automatically cuts the gas supply.

▷ Further information can be obtained from the separate instruction manual "Gas cooker".

The vehicle kitchen unit is fitted with a two-burner gas cooker (Fig. 61).


Fig. 61 Gas cooker

*Switching on:*

- Open the regulator tap on the gas bottle and the gas isolator tap "Cooker".
- Open the gas cooker lid.
- Switch on the gas cooker using the switch (Fig. 61,2).
- Turn the control knob (Fig. 61,1) on the burner you wish to use to the ignition position (large flame).
- Press the control knob down and hold it.
- Light the burner with a gas lighter, a match or other suitable means of lighting.
- Once the flame is burning, the control knob must be held down for 10 to 15 seconds, until the thermocouple automatically keeps the gas supply open.
- Release the control knob and turn to the desired setting.
- If ignition is unsuccessful, repeat the entire procedure.

*Switching off:*

- Turn the control knob to the 0-position. The flame fades.
- Switch off the gas cooker using the switch (Fig. 61,2).
- Close the gas isolator tap "Cooker" and the regulator tap on the gas bottle.

## 10.5 Refrigerator

During the journey, only operate the refrigerator via the 12 V power supply. At high ambient temperatures the refrigerator is unable to reach its full cooling power.

### 10.5.1 Operation (Thetford T1000)

- ▶ Always keep the ventilation openings unobstructed.
- ▶ Due to technical reasons, the temperature in the refrigerator and in the freezer compartment cannot always be maintained at a constant level. Under adverse conditions, the food in the freezer compartment may thaw.

- ▷ Do not use any objects or hot air devices to accelerate defrosting.
- ▷ When the vehicle is exposed to intense sunlight: ventilate vehicle adequately.
- ▷ Before setting off, secure the products in the refrigerator against sliding.

- ▷ The refrigerator temperature depends on the ambient temperature (room temperature), the frequency the door is opened with, and the filling of the refrigerator. If required, readjust the cooling level.
- ▷ The living area battery has a limited power supply only. When the vehicle is stationary, do not use the refrigerator for long periods without it being connected to the 240 V connection.
- ▷ Check the collection tray for condensation before setting off and periodically during operation of the refrigerator.
- ▷ Further information can be obtained in the manufacturer's instruction manual.

**Operating modes**

The refrigerator is only operated with 12 V DC.

The 12 V power supply is always fed via the transformer/rectifier.

When the vehicle is in motion, the transformer/rectifier feeds the power from the vehicle generator to the refrigerator.

When the vehicle is stationary and **not** connected to the 240 V power supply, the transformer/rectifier supplies the refrigerator with power from the living area battery.

When the vehicle is stationary and connected to the 240 V power supply, the transformer/rectifier transforms the input voltage to 12 V and then supplies this current to the refrigerator.

Conversion between the individual supply types is automatic.

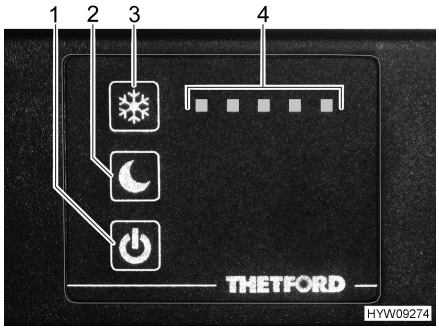


1 On/off button with blue indicator lamp
2 Night mode button
3 Temperature setting button
4 Display of the cooling level

Fig. 62 Operating control

*Switching on:*

- Press on/off button (Fig. 62,1) and hold for approximately 2 seconds. The blue indicator lamp shows that the refrigerator is working. The display (Fig. 62,4) shows the set cooling level. This display is dimmed after approximately 10 seconds.

*Switching off:*

- Press on/off button (Fig. 62,1) and hold for approximately 2 seconds. The blue indicator lamp will go out slowly.

The cooling levels, with which the refrigerator cools, must be selected depending on the room temperature. A high room temperature requires a higher cooling level. At a low room temperature, a lower cooling level would be enough.

*Setting the cooling level:*

- Press the temperature setting button (Fig. 62,3) and hold for approximately 1 second. The currently set cooling level (Fig. 62,4) is displayed.
- Press the temperature setting button (Fig. 62,3) as often as necessary until the desired cooling level is reached.

The refrigerator has a night mode. When the night mode is switched on, the refrigerator works silently with low power.

*Switching on the night mode:*

- Press the night mode button (Fig. 62,2). The blue indicator lamp shows that the night mode is active.

*Switching off the night mode:*

- Press the night mode button (Fig. 62,2). The blue indicator lamp will go out. The refrigerator is working in normal mode again.

During operation, condensation may collect in the collection tray underneath the freezer compartment. The collection tray must be emptied periodically.

*Emptying the collection tray:*

- Push two pins (on the left-hand and the right-hand side of the collection tray) inwards.
- Pull collection tray out and empty it.

If an ice layer thicker than 3 mm has formed in several places of the freezer compartment, the refrigerator must be defrosted.

*Defrosting:*

- Switch off the refrigerator.
- Take all products out of the refrigerator.
- Leave the refrigerator door open.
- Place a suitable container underneath the drainage opening of the collection tray.
- Remove the stopper from the drainage opening.
- Wipe up the defrosting water with a sponge or cloth.
- When the refrigerator is defrosted: insert the stopper of the drainage opening again.
- Clean the refrigerator.

### 10.5.2 Operation (Cruise 65)

▷ If the red LED is flashing on the operating unit, there is a fault present (see section 15.6).

**Operating modes**

The refrigerator has 2 operating modes:

- 12 V operation
- 240 V operation

The operating mode is selected automatically via the transformer/rectifier.

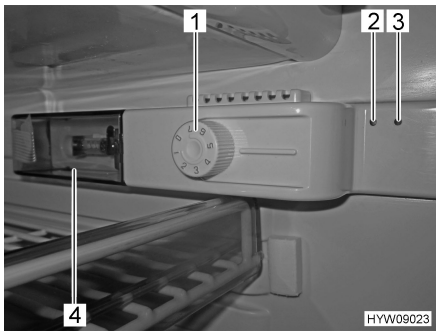


Fig. 63 Operating controls for refrigerator

1 Temperature controller
2 Green LED: Operation
3 Red LED: Error
4 Interior lighting

*Switching on:*

- Turn the temperature controller (Fig. 63,1) clockwise. The green LED (Fig. 63,2) lights up.
- Set the desired refrigerating temperature at the temperature controller (Fig. 63,1).
  - "1" means low cooling power.
  - "7" means high cooling power.

*Switching off:*

- Switch the temperature controller (Fig. 63,1) to "0". The green LED (Fig. 63,2) goes out.

▷ Further information can be obtained in the manufacturer's instruction manual.

### 10.5.3 Refrigerator door locking mechanism

▷ During the journey the refrigerator door must always be closed and locked in the closed position.

▷ Lock the refrigerator door in ventilation position when the refrigerator is switched off. This prevents mould forming.

There are two positions for locking the refrigerator door in place:

- Closed refrigerator door during travel and when the refrigerator is in operation
- Slightly opened refrigerator door as a ventilation position when the refrigerator is switched off

**T1000** The refrigerator is opened and closed with the handle on the door.

The refrigerator door may be locked in ventilation position with a swivelling bracket.

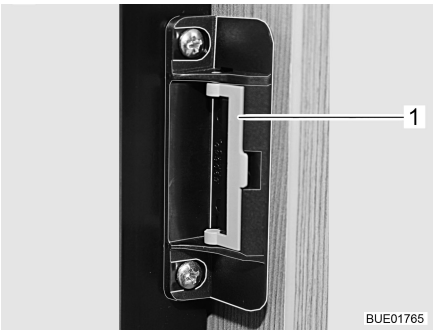


Fig. 64 Locking device in normal position


Fig. 65 Locking device in ventilation position

*Locking in the ventilation position:*

- Open the refrigerator door.
- Swing the bracket (Fig. 64,1) to the front (Fig. 65).

If the refrigerator door is closed now, a gap will remain between the refrigerator door and the refrigerator.

**Cruise 65**

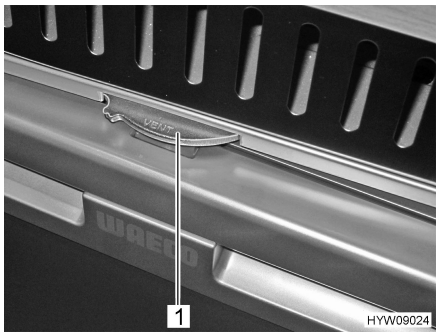


Fig. 66 Refrigerator door locking mechanism

*Opening:*

- Pull the door handle upward and open the refrigerator door.

*Closing:*

- Turn the locking wheel (Fig. 66,1) as far as possible clockwise ("Lock"). The "Lock" position remains permanently set during operation.
- Fully close the refrigerator door.

*Locking in the ventilation position:*

- Turn the locking wheel (Fig. 66,1) as far as possible anticlockwise ("Vent").
- Close the door until it engages in the ventilation position.

## Chapter overview

This chapter contains instructions regarding the sanitary fittings of the vehicle.

The instructions address the following topics:

- complete water system
- water tank
- waste water tank
- toilet compartment
- toilet

## 11.1 Water supply, general

- ▶ Fill water tank from supply systems that have been verified to provide drinking water quality.
- ▶ Only use such hoses or containers when filling that have been approved for use with drinking water.
- ▶ Thoroughly rinse filling hose or container with drinking water before use (2 to 3 times capacity).
- ▶ Empty filling hose or container completely after use and close openings of the filling hose or container.
- ▶ Water left standing in the water tank or in the water pipes becomes undrinkable after a short period. Therefore, before each use of the vehicle, thoroughly clean the water pipes and the water tank. After each use of the vehicle completely empty the water tank and the water pipes.
- ▶ In the case of lay-ups lasting more than a week disinfect the water system before using the vehicle (see chapter 12).

- ▷ If the vehicle is not used for several days or if it is not heated when there is a risk of frost, empty the entire water system. Make sure that the 12 V power supply on the panel is switched off. Otherwise, the water pump will overheat and may get damaged. Leave the water taps on in central position. Leave all drain cocks open. Frost damage to appliances, frost damage to the vehicle and deposits in water-carrying components can be avoided in this way.
- ▷ The water pump will overheat without water and can get damaged. Never operate water pump when the water tank is empty.

The vehicle is equipped with a fitted water tank. An electric water pump pumps the water to the individual water taps. Opening a water tap automatically switches on the water pump and pumps water to the tap.

The waste water tank collects the waste water. The water level in the water and waste water tanks can be checked on the panel.

- ▷ Before the water fittings can be used, the 12 V power supply on the panel must be switched on. Otherwise the water pump will not work.
- ▷ When the water tank is re-filled, an air bubble may form at the bottom of the pump. This air bubble will prevent water from being drawn in. Shake the water pump up and down energetically in the water.

## 11.2 Water system

### 11.2.1 Water tank

The water tank holds up to 100 l.

The water tank is installed in the right hand bed chest (Fig. 67,4) or in the right side cabinet.


Fig. 67 Water tank

*Access to the water tank:*

- Fold up the right bed base (in the direction of travel).

The water pump (Fig. 67,1), handle (Fig. 67,2) for draining off the water and the cleaning opening (Fig. 67,3) can be accessed through this service opening.

### 11.2.2 Filling the water system

▶ When filling the water tank, observe the maximum permissible gross weight of the vehicle. Luggage must be reduced accordingly when the water tank is full.

▷ The water pump will overheat without water and can get damaged. Never operate water pump when the water tank is empty.

▷ The water quantity can be monitored on the panel while the water tank is filled.

- Position the vehicle horizontally.
- Switch on the 12 V power supply on the panel.

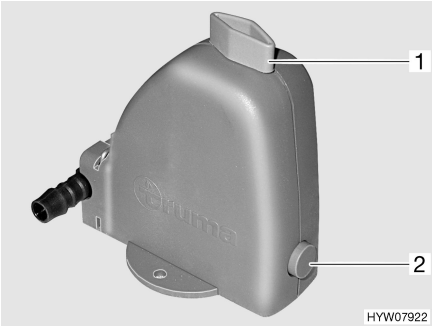


Fig. 68 Safety/drainage valve

- Close the safety/drainage valve (Fig. 68). Turn the knob (Fig. 68,1) perpendicular to the safety/drainage valve and push the push button (Fig. 68,2) in. If the temperature is below 6 °C, the safety/drainage valve cannot be closed.

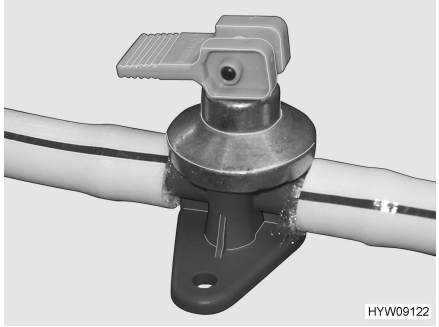


Fig. 69 Drain cock with rocking lever

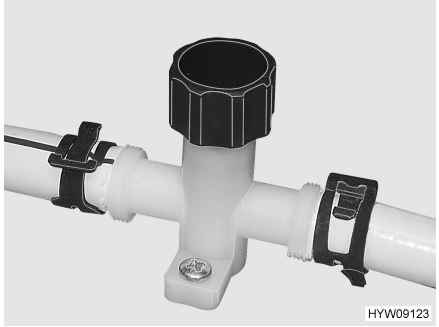


Fig. 70 Drain cock with knob

- Close all drain cocks (Fig. 69 or Fig. 70).
- Close all water taps.
- Close drainage opening on the water tank.
- Open the drinking water filler neck on the outside of the vehicle.
- Fill the water tank with drinking water. Use a water hose, a water canister with a funnel or similar for filling.
- Set all the water taps to "Hot" and open them. The water pump is turned on. The warm water pipes are filled with water.
- Keep the water taps open until the water flowing out of the water taps has no bubbles in it. This is the only way to ensure that the boiler is full of water.
- Set all water taps to "Cold" and leave them open. This will fill the cold water pipes with water.
- Keep the water taps open until the water flowing out of the water taps has no bubbles in it.
- Close all water taps.
- Close drinking water filler neck.
- Check that the cap on the water tank is not leaking.

### 11.2.3 Topping up the water

▶ When filling the water tank, observe the maximum permissible gross weight of the vehicle. Luggage must be reduced accordingly when the water tank is full.

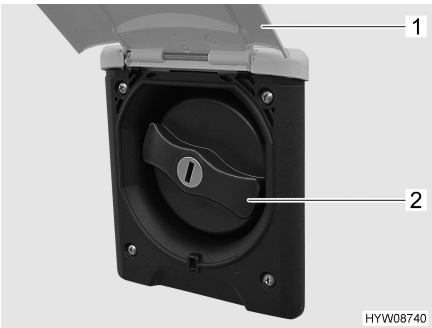


Fig. 71 Cap for the drinking water filler neck

The drinking water filler neck is on the right or left side of the vehicle, depending on the model.

The drinking water filler neck is marked by the symbol "".

*Opening the drinking water filler neck:*

- Swivel the external flap (Fig. 71,1) upwards.
- Insert key into locking cylinder and turn a quarter turn. The cap is unlocked.
- Remove the key.
- Turn the blue cap (Fig. 71,2) one quarter turn.
- Remove the cap.

*Filling with water:*

- Fill the water tank with drinking water. Use a water hose, a water canister with a funnel or similar for filling.

*Closing the drinking water filler neck:*

- Place cap on the drinking water filler neck.
- Turn cap one quarter turn.
- Insert key into locking cylinder and turn a quarter turn. The cap is locked.
- Remove the key.
- Check that the cap sits firmly on the drinking water filler neck.
- Swivel external flap downwards and close it.

### 11.2.4 Draining water

**Handle** The handle for draining off the water is mounted on the water tank.


Fig. 72 Water drainage handle

*Opening:*
- Turn the handle (Fig. 72,1) on the water anticlockwise as far as possible.

*Closing:*
- Turn the handle (Fig. 72,1) on the water tank clockwise as far as possible.

### 11.2.5 Emptying the water system

▷ If the vehicle is not used for several days or if it is not heated when there is a risk of frost, empty the entire water system. Make sure that the 12 V power supply on the panel is switched off. Otherwise, the water pump will overheat and may get damaged. Leave the water taps on in central position. Leave the safety/drainage valve and all drain cocks open. Frost damage to appliances, frost damage to the vehicle and deposits in water-carrying components can be avoided in this way.

▷ Take note of the environmental tip in this chapter.

To empty and ventilate the water system, proceed as follows. This prevents frost damage and deposits:

- Position the vehicle horizontally.
- Switch off the 12 V power supply on the panel.
- Switch off the 240 V power supply on the 240 V fuse box.
- Switch off the boiler.

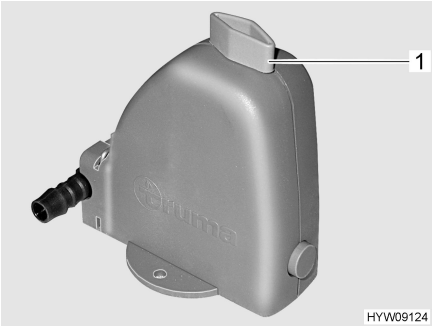


Fig. 73 Safety/drainage valve

- Open the safety/drainage valve (Fig. 73). To do this turn the knob (Fig. 73,1) parallel to the safety/drainage valve.

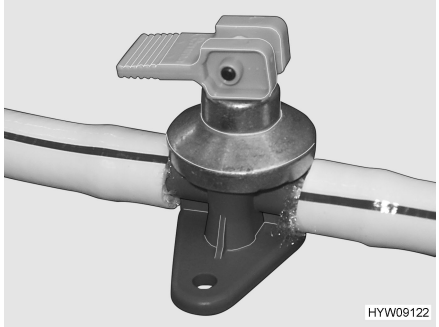


Fig. 74 Drain cock with rocking lever

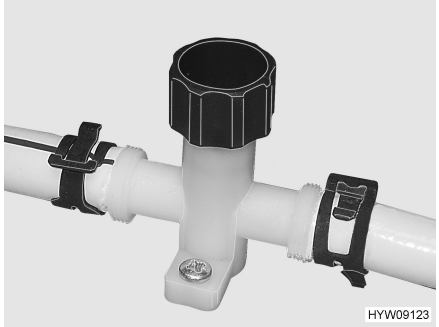


Fig. 75 Drain cock with knob

- Open all drain cocks (Fig. 74 or Fig. 75).
- Unscrew the cap of the water tank.
- Remove water pump and water hose from the water tank.
- Open the water tank drain.
- Open all water taps and set to the central position.
- Hold the shower handset up.
- Hold the water pump up until the water pipes are completely empty.
- Check whether the water tank is completely empty.
- Blow out the remaining water in the water pipes (max. 0.5 bar). To do this, remove the water pipe from the water pump and blow into the water pipe.
- Empty the waste water tank. Take note of the environmental tips in this chapter.
- Empty the sewage tank. Take note of the environmental tips in this chapter.
- Clean the water tank and then rinse it out thoroughly.
- Let the water system dry for as long as possible.
- After emptying, leave all water taps on in the central position.
- Leave all the drain cocks and safety/drainage valves open.

## 11.3 Waste water tank

▷ If there is a risk of frost, empty the waste water tank and leave the drain cock open.

▷ Never pour boiling water directly into the sink outlet. Boiling water could cause deformation and leaks in the waste water pipe system.

▷ Only empty the waste water tank at disposal stations, camping sites or caravan sites especially provided for this purpose.

Waste water from the kitchen and washing unit flows through plastic pipes into the waste water tank.

The waste water tank is located underneath the floor of the vehicle.

**Volume** The waste water tank holds 90 l.

**Cleaning** Clean the waste water tank several times a year (see chapter 12).

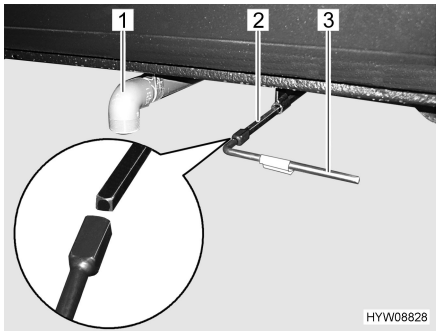


Fig. 76 Operating lever and drain pipe of the waste water tank

*Emptying:*

- Place the drain pipe (Fig. 76,1) directly above the disposal station or attach the waste water hose (special equipment) onto the drain pipe (Fig. 76,1).
- Open the drain cock. To do this, attach the supplied square spanner (Fig. 76,3) onto the square of the drain cock (Fig. 76,2).
- To do this, turn the square spanner (Fig. 76,3) a quarter turn anticlockwise. The waste water is drained.
- After the waste water has drained off: Close the drain cock again. To do this, turn the square spanner (Fig. 76,3) a quarter turn clockwise.
- Remove the square spanner (Fig. 76,3) and store it.
- If present, remove and store the waste water hose.

### 11.3.1 Electric waste water pipe heating

▷ The electric waste water pipe heating only operates if the vehicle is connected to the 240 V power supply.

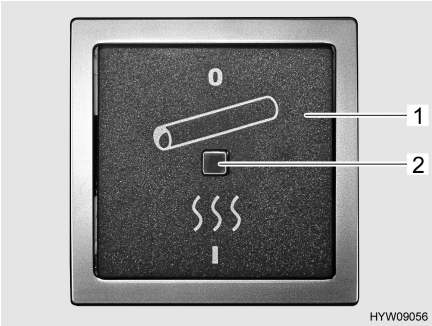


Fig. 77 Switch for electrical waste water pipe heating

*Switching on:*

- Connect the vehicle to the 240 V power supply.
- Set rocker switch (Fig. 77,1) to the "I" position.
  The indicator lamp (Fig. 77,2) on the switch is illuminated.

*Switching off:*

- Set rocker switch (Fig. 77,1) to the "0" position.
  The indicator lamp (Fig. 77,2) on the switch goes off.

**Position** The switch is accessible through an external flap on the left-hand side of the vehicle.

## 11.4 Toilet compartment

▷ Do not transport any loads in the shower tray. The shower tray or other items of equipment in the toilet compartment can be damaged.

▷ For ventilation purposes during or after a shower, and for drying wet clothing, close the toilet compartment door and open the window or the toilet compartment skylight. This improves the air circulation.

▷ Use the shower handset for showers. To do so, pull out the shower handset.

▷ Close the shower curtain completely when showering, so that no water is able to enter the area between the wash room wall and the shower tray.

▷ After taking a shower, rinse soap residue from the shower tray, otherwise cracks can appear in the shower tray over time.

▷ After using the shower, wipe it dry to prevent moisture from collecting.

▷ Further information about cleaning the toilet compartment can be found in the section 12.2.

## 11.5 Thetford toilet

▷ If there is any risk of frost and the vehicle is not heated, empty the sewage tank.

▷ Do not sit on the lid of the toilet. The lid is not designed to bear the weight of a person and could break.

▷ Use a suitable chemical for this toilet. The ventilation will merely remove the odour but not germs and gases. Germs and gases will have a detrimental effect on the sealing rubbers.

▷ Further information can be obtained in the manufacturer's instruction manual.

▷ Only empty the sewage tank at disposal stations, at camping sites or caravan sites, that are especially provided for this purpose.

### 11.5.1 Swivel toilet

The flushing of the Thetford toilet is fed directly from the water system of the vehicle. The toilet bowl can be moved into the optimal position.


Fig. 78 Thetford toilet bowl, swivelling

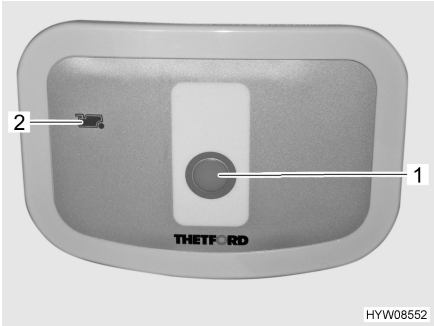


Fig. 79 Flush button/indicator lamp Thetford toilet

The operating unit is located close to the toilet bowl.

*Flushing:*

- Before flushing open the sliding trap of the Thetford toilet. To do this, push the slide lever (Fig. 78,1) in an anticlockwise direction.
- For flushing, press the blue flush button (Fig. 79,1).
- After flushing close the sliding trap. To do this, push the slide lever in a clockwise direction.

The indicator lamp (Fig. 79,2) lights up whenever the sewage tank has to be emptied.

### 11.5.2 Emptying the sewage tank

▷ The sewage tank can only be taken out if the sliding trap is closed.

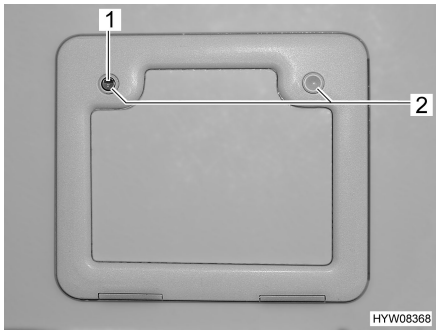


Fig. 80 Flap for the sewage tank

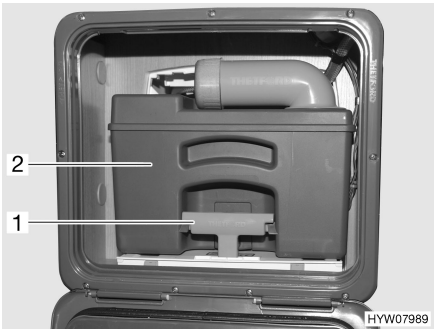


Fig. 81 Sewage tank

- Slide the slide lever on the toilet bowl in a clockwise direction. The sliding trap is closed.
- Open the flap for the sewage tank on the outside of the vehicle. Insert the key into the locking cylinder of the push-button lock (Fig. 80,1) and turn a quarter turn in a clockwise direction.
- Remove the key.
- Press both push-button locks (Fig. 80,2) simultaneously with your thumb and open the flap for the sewage tank.

- Pull the retaining clip (Fig. 81,1) upwards and pull out the sewage tank (Fig. 81,2).
- Completely empty the sewage tank at disposal stations that are especially provided for this purpose.

▷ Actuate the aeration knob on the sewage tank with your thumb to empty it completely.

### 11.5.3 Winter operation

▷ Do not use antifreeze. Antifreeze can damage the toilet.

When the vehicle is being heated, the toilet, the water tank and the sewage tank are in a frost-protected area. This means that the toilet can also be used in winter.

If the vehicle is not being heated and there is a risk of frost in the water tank, drain off the sewage tank and the water pipes. This prevents frost damage.

### 11.5.4 Temporary lay-up

▷ If the toilet is not to be used for an extended period, empty the water tank, the sewage tank and the water pipes.

*Laying up the toilet:*

- Empty the water tank.
- Flush the toilet until no more water runs into the toilet.
- Empty the sewage tank.
- Rinse the sewage tank thoroughly.
- Leave the drainage neck on the sewage tank open.
- Let the sewage tank dry for as long as possible.

## 11.6 Position of the drain cocks and safety/drainage valve

Depending on the model, the drain cocks or the safety/drainage valve are accessible at the following positions:

| Model | Position of drain cock | Position of safety/drainage valve |
|---|---|---|
| 600 | Under floor trap | In the seat box, next to the boiler |
| 640 | Under floor trap | In the seat box, next to the boiler |

## Chapter overview

This chapter contains instructions regarding the care of the vehicle.

The instructions address the following topics:

- exterior of the vehicle
- interior
- cushions
- water system
- winter operation

At the end of the chapter there is a checklist of measures you must carry out if you are not going to use the vehicle for an extended period of time.

The checklist address the following topics:

- temporary lay-up
- winter lay-up
- start-up after a lay-up

## 12.1 External care

### 12.1.1 General

Standard external care consists of regular washing. The use and the environmental conditions will determine how often the vehicle needs to be washed. Wash the vehicle more frequently in areas which are exposed to heavy air pollution or heavy traffic or roads treated with de-icing salts. If the vehicle is exposed to salty and humid air (coastal areas, humid climates), wash the vehicle more frequently.

Do not park under trees if at all possible. The resin-like discharge which many trees secrete, give the paintwork a matt look and can promote the onset of corrosion.

Wash off bird droppings straight away and thoroughly, as the acid it contains is extremely corrosive.

### 12.1.2 Washing with a high-pressure cleaner

▷ Do not clean the tyres with a high-pressure cleaner. The tyres might be damaged.

▷ Do not spray external applications (deco-films) directly with the high-pressure cleaner. The external applications could come off.

Before cleaning the vehicle with a high-pressure cleaner, observe the operating instructions of the high-pressure cleaner.

When cleaning with the nozzle for circular jet between the vehicle and the cleaning nozzle, maintain a minimum distance of approx. 700 mm.

Take into consideration that the jet of water comes out of the cleaning nozzle with pressure. The vehicle may be damaged by incorrect handling of the high-pressure cleaner. The temperature of the water should not be above 60 °C. Keep the jet of water in constant movement during the washing process. Do not direct the water jet at clearances, built-in electrical parts, plugs, seals, the ventilation grill or the skylights. The vehicle may be damaged or water may enter the interior.

### 12.1.3 Washing the vehicle

▷ Never clean the vehicle in the car wash. The brush rollers can damage the external applications. Water can enter the waste gas vents or the forced ventilations. The vehicle could be damaged.

- Wash the vehicle only on a washing site intended for this purpose. Avoid full sunshine. Observe environmental measures.
- When using a cleaning agent, observe the manufacturer's instructions for use. Cleaning agent must be pH-neutral.
- First, test the suitability of the cleaning agent on an inconspicuous spot.
- Only clean external applications and synthetic parts with plenty of warm water, dish washing liquid and soft cloth.
- Wash down the vehicle with plenty of water, a clean sponge or a soft brush. In the case of stubborn dirt add dish washing liquid to the water.
- Painted exterior walls may also be cleaned with a caravan cleaner.
- Treat rubber seals on doors with a conventional rubber care product.
- Treat locking cylinder on doors with graphite dust.

### 12.1.4 Windows of acrylic glass

Acrylic glass windows are delicate and require very careful handling.

▷ Never rub acrylic glass windows dry as dust particles might damage the surface!

▷ Only clean acrylic glass windows with plenty of warm water, some dish washing liquid and a soft cloth.

▷ Never use glass cleaning agents with chemical, abrasive or alcohol-containing additives. Premature brittleness of the panes and associated cracks may result from their use.

▷ Avoid contact of cleansing agents used for the body (e.g. tar- or silicone-removing agents) with acrylic glass.

▷ Do not clean vehicle in car wash.

▷ Do not attach stickers to the acrylic glass windows.

▷ Having cleaned the vehicle rinse acrylic glass with sufficient clear water.

▷ Treat rubber seals with a conventional rubber care product.

▷ An acrylic glass cleanser with antistatic effect is suitable for a follow-up treatment. Small scratches can be treated with an acrylic glass polish. These agents are available at the accessories shop.

### 12.1.5 Add-on parts made of glass-fibre reinforced plastic (GRP)

▷ Avoid contact between polish and window rubber and piping.

▷ The glass-fibre reinforced plastic (GRP) may not become too hot. Therefore when polishing with a polishing machine, keep the machine in constant motion.

GRP add-on parts can turn yellow or become weather-worn due to insufficient care for the vehicle or ageing of the material.

GRP add-on parts should therefore undergo regular follow-up treatment. This way, these parts will not turn yellow and the sealing of the surface remains intact.

*Follow-up treatment of GRP add-on parts:*

- Wash the vehicle and allow to dry as described above. Check if the GRP add-on parts are clean and dry.
- Apply the polisher with a soft cloth evenly on the surface of the GRP add-on part.
- Wait until a light grey film forms.
- Wipe the GRP add-on part with a dry, soft cloth. Move the cloth in circles over the surface of the GRP add-on part.

We recommend using a polishing machine for this work.

▷ Paint protection has to be used to preserve the polish. Please read the instructions of the paint protection for details on how to apply it.

### 12.1.6 Underbody

The underbody of the vehicle is partly coated with an age-resistant underbody protection. Should the underbody protection be damaged, repair immediately. Do not treat areas coated with underbody protection with spray oil.

▷ Only use products approved by the manufacturer. Our authorised dealers and service centres will be happy to advise you.

### 12.1.7 Engine compartment

▷ Cleaning and care of the engine compartment may only be carried out while the ignition is switched on.

▷ Let the engine cool down before carrying out any work in the engine compartment. There is a danger of burns when touching motor components that are still hot!

▷ Before carrying out any work in the engine compartment, read and observe the corresponding warning and handling instructions in the operating manual of the base vehicle manufacturer.

▷ Have an engine washing only carried out by an authorised specialist workshop.

▷ Do not aim the steam jet directly at the lamp housings, actuators or seals. This may prevent humidity in the headlights and the defects resulting therefrom.

▷ Do not aim the steam jet at the windscreen wiper motor and the wiper mechanics.

▷ Only apply protective engine lacquer when the components in the engine compartment have cooled down and are clean.

▷ Only use lubricants, greases and fluids authorised by the base vehicle manufacturer.

The body manufacturer excludes any guarantee for damages, leaks, or the failure or electrical components that appear after an engine washing.

### 12.1.8 Windscreen washer system and windscreen wipers

▷ Only fill the cleaning agents (with/without frost protection) into the washer fluid container which are listed in the operating manual of the base vehicle manufacturer and in the mixing ratio specified therein. Do not use any radiator frost protection or other products. These products affect the cleaning effect and attack the windscreen blades.

▷ Do not switch the windscreen washer system or the windscreen wipers on when the windscreen blades are frozen to the windscreen. Release the windscreen blades first using a defrosting product.

▷ Do not remove the snow accumulated on the windscreen with the windscreen wipers. Remove the snow from the windscreen with a brush first.

▷ Do not switch on the windscreen wipers on a dry windscreen.

▷ Do not clean the windscreen wiper mechanics and the windscreen wiper motor with a steam blaster.

- Check the correct functioning of windscreen washer system and windscreen wipers periodically.
- Check the filling level of the washer fluid container periodically. Only if sufficient cleaning fluid reaches the windscreen, the windscreen wipers will be able to clean it in a satisfactory way. A clear view contributes decisively to safe driving.
- Before the frost period starts, fill the washer fluid container with windscreen cleaning product containing sufficient frost protection.
- Refill windscreen washing fluid on time. Only use clean water to dilute the windscreen cleaning product.
- Remove insect residues from the windscreen blades as soon as possible.
- Clean the windscreen blades periodically with a windscreen cleaning product. To do this, move a sponge or a cloth along the rubber strip.
- Remove car wax residues after the vehicle washing using a wax dissolving windscreen cleaning product.
- Remove dirt accumulations on the nozzles of the windscreen washer system periodically.
- After journeys on heavily soiled roads, spray clear water on the wiper nozzles to prevent incrustations.
- Clean obstructed wiper nozzles with a fine needle.

### 12.1.9 Entrance step

If the entrance step is lubricated, coarse particles of dirt can settle on the lubricant during the journey and cause damage to the operating mechanism of the entrance step. Therefore, do not lubricate the moving parts of the entrance step.

## 12.2 Interior care

▷ If possible, treat stains immediately.

▷ Acrylic glass windows are delicate and require very careful handling (see section 12.1.4).

▷ Synthetic parts in the toilet and living area are very delicate and should be treated with care. Do not use solvents, alcohol-containing cleansers or scourers. This procedure will help you to avoid brittleness and formation of cracks.

▷ Hair colourants, nail varnish, cigarette ash and similar substances may cause permanent stains or discolouration. For this reason, you should prevent these substances from getting onto plastic parts. If they do get onto plastic parts, you should remove these substances immediately.

▷ Do not pour any corrosive agents into the drain holes. Never pour boiling water directly into the drain holes. Corrosive agents and boiling water cause damage to drainage pipes and siphon traps.

▷ Do not use vinegar based products to clean the toilet and water system, or for decalcification of the water system. Vinegar-based products may cause damage to seals or parts of the installation. Use standard decalcifying products for decalcification.

▷ Save water. Mop up all remaining water.

▷ For information about the use of maintenance products, our representatives and service centres will be glad to advise.

- Surface and knobs of furniture, lamps and synthetic parts in the toilet and living area should be cleaned with water and a wool cloth. A mild cleanser may be added to the water. If required, use furniture polish for the painted surfaces.
- Curtains and net curtains should be dry cleaned.
- Vacuum clean the carpet, if necessary clean with carpet shampoo.
- Clean PVC-floor covering with a mild, soapy cleanser for PVC floors. Do not place carpet on wet PVC-floor covering. The carpet and the PVC-floor covering may stick together.
- Brush insect screen with a soft brush or vacuum with the brush attachment of the vacuum cleaner.
- Brush blinds with a soft brush or vacuum with the brush attachment of the vacuum cleaner. Grease or stubborn dirt may be removed with a mild soap at 30 °C (curd soap).
- Brush Roman shades with a soft brush or vacuum with the brush attachment of the vacuum cleaner. Grease or stubborn dirt may be removed with a mild soap at 30 °C (curd soap).
- Unrolled seat belts can be cleaned with warm soapsuds. The seat belt must be completely dry before being rolled up.

## 12.3 Kitchen installation

### 12.3.1 General notes on care

- Never clean the sink or the gas cooker with a scourer. Avoid anything which may cause scratching or grooves.
- The surface of the kitchen worktop is not scratch proof. When working with sharp objects, always use a pad. Only use soft cleaning agents for cleaning and care. Do not use any abrasive or scratching intensive treatment products nor scratching sponges.

- Clean the sink cover manually using water and washing-up liquid. Do not clean the sink cover in the dishwasher.
- Clean the burners on the gas cooker using a damp cloth only. Prevent any water from penetrating the burner covers. Water may damage the burners on the gas cooker.
- Clean the surface of the cooker, and particularly the hob, with warm water and some washing-up liquid. Scouring agent or sharp objects damage the surface of the hob.
  The surface of the hob is easier to clean when it is still slightly warm. Before cleaning, ensure that the hob is only still warm to the touch (residual heat indicator has gone out).
  Always clean the hob before using it again.
- When cleaning the burner ring, ensure that the holes are not obstructed.
- The knobs can be pulled off for cleaning.
- Clean the external surfaces of the kitchen installation with a wet cloth without abrasive, corrosive or chloride containing cleaning agents. Do not use steel wool.
- Immediately remove acidic or alkaline substances (vinegar, salt, lemon juice, etc.).

### 12.3.2 Stainless steel surfaces

▷ Do not clean the stainless steel surfaces with bleaching agents, with products that contain chloride or hydrochloric acid, baking powder nor with silver polish.

▷ Do not use scouring agent nor coarse sponges.

▷ Prior to cleaning, test the suitability of the cleaning product for the surface on an unobtrusive spot.

▷ Dry the surfaces thoroughly after cleaning to prevent limescale.

▷ In the case of brushed stainless steel surfaces, wipe in a direction of the grinding.

*Removing scratches from the surface:*

- Treat the stainless steel surface with a soft cleaning cloth and with a special stainless steel cleaner.
- Rinse the stainless steel surface and dry it with household wipes.

*Removing stubborn dirt and burnt-in fat:*

- Clean the stainless steel surface with an ordinary household sponge and with cleanser.
- Rinse the stainless steel surface and dry it with household wipes.

*Removing fingerprints:*

- Clean the stainless steel surface with a soft cleaning cloth and soapy water or a glass cleaning agent.
- Rinse the stainless steel surface and dry it with household wipes.

*Removing coffee or tea stains:*

- Treat the stainless steel surface with a baking soda solution. Allow the baking soda solution to work in for 15 minutes.
- Rinse the stainless steel surface and dry it with household wipes.

*Removing rust stains:*

- Clean the stainless steel surface with an ordinary household sponge and with cleanser. If necessary, use a soft cleaning cloth and stainless steel cleaner.
- Rinse the stainless steel surface and dry it with household wipes.

### 12.3.3 Refrigerator

- Clean the exterior and interior of the refrigerator with a soft cloth and lukewarm water (containing a mild cleaning agent).
- Then, wash the refrigerator out with clear water and let it dry.
- Keep the defrosted water drain channel free of sediments.
- To prevent material changes, do not use any soap, nor any sharp, granular or soda containing cleaning agents.
- Keep oil and grease away from the door seal.

## 12.4 Cushions

The care and cleaning instructions below are for assistance only. They are not a guarantee of successful cleaning. These instructions cannot form the basis for any warranty claims.

▷ If possible, treat stains immediately.

▷ Never use household cleaners to remove marks (e.g. detergents).

▷ Before treating marks, test the cleaning on a hidden part of the upholstery covers. This will show you whether the cleaning will damage the materials or dyes.

▷ Always only dab moist or greasy marks, never rub them. It is most effective to gently press an absorbent cloth or a sponge onto the mark.

▷ Do not wash upholstery.

▷ When cleaning leather covers, make sure that the leather is not soaked through and that no water seeps through the seams of the leather covers.

▷ Treat the mark from the outside working inwards. This prevents the mark from spreading.

▷ In the case of both solid or softer contamination, first remove the coarse parts. Next, carefully scrape off the mark with a blunt knife or spatula.

▷ If the mark has already dried in, carefully brush off the coarse parts. Next, dab off the mark with a damp cloth or sponge.

▷ The upholstery will fade over time, if it is exposed to sunlight. If the temperature within the vehicle rises rapidly as well, the colour will change at an accelerated rate.
Therefore, we recommend to close the shades on the windows when there is strong sunlight. Ensure that heat does not build up when you close the blind.

**Grease, oil, wine, milk, non-alcoholic beverages**

Use only ordinary water-based cleaning agents. Alternatively, mix 2 tablespoons of ammoniac with 1 litre of water. Gently dab the mark with a cloth moistened with this solution. Turn the cloth frequently so that the mark only comes into contact with a clean part of the cloth.

**Urine, sweat** Use only ordinary water-based cleaning agents. Alternatively, mix 2 tablespoons of ammoniac with 1 litre of water. Gently dab the mark with a cloth moistened with this solution. Turn the cloth frequently so that the mark only comes into contact with a clean part of the cloth.

**Chocolate, coffee** Dab with lukewarm water.

**Fruits** Dab with cold water.

**Wax, candle** Carefully scrape off the wax with a blunt knife or spatula. Cover the mark with several layers of waterleaf paper and iron.

**Blood** Mix 2 tablespoons of salt and 1 litre of water. Moisten the mark and dab with a dry cloth. Dab stubborn marks with ammonia solution.

**Ballpen, ink** Gently dab the mark with a cloth moistened with cleaner's naphtha. Turn the cloth frequently so that the mark only comes into contact with a clean part of the cloth.

**Mud** Carefully remove as much mud as possible with a blunt knife or a spatula. Allow the mud to dry and then remove it with a vacuum cleaner. For stubborn marks, use only ordinary water-based cleaning agents. Alternatively, mix 2 tablespoons of ammonia solution with 1 litre of water. Gently dab the mark with a cloth moistened with this solution. Turn the cloth frequently so that the mark only comes into contact with a clean part of the cloth.

**Pencil** Use only mild, water-free and clean textile cleaning agents. Moisten a cloth with the agent. Gently dab the mark with a cloth moistened with this solution. Turn the cloth frequently so that the mark only comes into contact with a clean part of the cloth.

**Vomit** Carefully clean up the vomit and wash it out with cold water. Use only ordinary water-based cleaning agents. Alternatively, mix 2 tablespoons of ammoniac with 1 litre of water. Gently dab the mark with a cloth moistened with this solution. Turn the cloth frequently so that the mark only comes into contact with a clean part of the cloth.

## 12.5 Water system

### 12.5.1 Cleaning the water tank

- Empty the water tank and close the drainage opening.
- Remove the cap of the water tank.
- Fill water tank with water and some washing-up liquid (do not use any scourers).
- Using a trade standard brush for washing dishes, scrub the water tank until there is no longer any visible deposit.
- Scrub also the pump housing.
- If possible, clean fresh water sensors through the cleaning openings by hand.
- Rinse water tank with copious amounts of drinking water.

▷ If, due to the design of the water tank, it is not possible to clean the water tank mechanically: Use a suitable chemical cleaning agent.

The authorised dealers would be happy to assist you in choosing a suitable cleaning agent.

Follow the cleaning agent manufacturer's instructions.

### 12.5.2 Cleaning the water pipes

▷ Only use suitable cleaning agents as sold by the specialist trade.

▷ The cleaning agent must meet national regulations and be approved (if required).

▷ Collect any emerging mixture of water and cleaning agent for correct disposal.

- Empty the water system.
- Close all drainage openings and drain cocks.
- Fill mixture of water and cleaning agent into the water tank. Observe the manufacturer's instructions regarding the mixing ratio.
- Open the drain cocks one by one.
- Leave the drain cocks open until the mixture of water and cleaning agent has reached the respective drain.
- Close the drain cocks.
- Set all the water taps to "Hot" and open them.
- Leave the water taps open until the mixture of water and cleaning agent has reached the drain.
- Set all water taps to "Cold" and open them.
- Leave the water taps open until the mixture of water and cleaning agent has reached the drain.
- Close all water taps.
- Flush the toilet several times.
- Allow the cleaning agent to act in accordance with the manufacturer's instructions.
- Empty the water system. Collect the mixture of water and cleaning agent for correct disposal.
- For rinsing fill the entire water system with drinking water and empty again several times over.

### 12.5.3 Disinfecting the water system

▷ Only use suitable disinfectants as sold by the specialist trade.

▷ The disinfectant must meet national regulations and be approved (if required).

▷ Collect any emerging mixture of water and disinfectant for correct disposal.

When disinfecting the water system, proceed the same way as when cleaning the water pipes (see section 12.5.2). Simply use disinfectant instead of cleaning agent.

### 12.5.4 Cleaning the waste water tank

Clean the waste water tank after every use.

- Empty the waste water tank.
- Open the cleaning opening on the waste water tank and the drain cock.
- Thoroughly rinse out the waste water tank with fresh water.
- If possible, clean waste water sensors through the cleaning opening by hand.

## 12.6 Winter care

De-icing salt damages the underbody and the parts open to water spray. We recommend that you wash the vehicle more frequently during wintertime. Mechanical and surface treated parts and the underside are under particular strain, and should therefore be cleaned thoroughly.

▷ If there is any risk of frost, always run heater at a minimum of 15 °C. Switch the circulation fan to automatic. In the case of extreme external temperatures, the furniture flaps and doors should be left slightly open. The inflowing warm air can help prevent the freezing of water pipes, for example, and counteract the formation of condensation in the storage spaces.

▷ If there is any risk of frost, cover the outside surface of the windows with winter insulation mats.

## 12.7 Lay-up

### 12.7.1 Temporary lay-up

▶ If the vehicle has been stationary for a long period (approx. 10 months) have the braking and gas systems checked by an authorised specialist workshop.

▶ Take into consideration that water is undrinkable after only a short time.

▶ Animal damage to cables can lead to short circuits. Fire hazard!

Animals (especially mice) can cause great damage to the interior of the vehicle. This is especially true if the animal remains undisturbed in a parked vehicle.

To keep damages from animals to a minimum or to avoid them altogether, regularly check the vehicle for damage or animal traces.

If animal traces are found, contact the authorised dealer or service centre. If damage to cables has occurred, they can result in short circuits. The vehicle could catch fire.

Before laying up the vehicle, go through the following checklist:

| | Activities | Done |
|---|---|---|
| **Base vehicle** | Completely fill fuel tank. This prevents corrosion damage within the fuel tank system | |
| | Jack up vehicle so that the wheels do not bear any load, or move vehicle every 4 weeks. This prevents any pressure points from occurring on tyres and wheel bearings | |
| | Protect the tyres from direct exposure to the sun. Danger of formation of cracks! | |
| | Inflate tyres up to the recommended maximum pressure | |
| | Always provide for sufficient ventilation in the underbody area<br>▷ Humidity or lack of oxygen e.g. by covering with plastic film may cause optical irregularities to the underbody. | |
| | In addition observe the notes in the operating manual of the base vehicle | |
| **Body** | All vents should be sealed with the appropriate caps and all other openings (apart from forced ventilations) should also be sealed. This prevents animals (e.g. mice) from gaining entry | |
| | Air the interior, all storage spaces accessible from the outside, and the parking space (e.g. garage) every 3 weeks in order to prevent the occurrence of condensation and resulting mould formation | |
| **Interior** | Place upholstery in an upright position for ventilation, and cover | |
| | Clean refrigerator | |
| | Allow refrigerator and freezer compartment doors to remain slightly open | |
| | Search for traces of animals that have gained entry | |
| | Disconnect the flat screen from the mains and, if necessary, remove it from the vehicle | |
| **Gas system** | Close regulator tap on the gas bottle | |
| | Close all gas isolator taps | |
| | Always remove gas bottles from the gas bottle compartment, even if they are empty | |
| **Electrical system** | Fully charge living area and starter battery<br>▷ Charge the battery for at least 20 hours before laying up. | |
| | Disconnect the living area battery from the 12 V power supply | |
| **Water system** | Empty the entire water system. Blow out the residual water from the water pipes (0.5 bar max.). Leave the water taps on in central position. Leave the safety/drainage valve and all drain cocks open. Observe notes in chapter 11 | |

### 12.7.2 Winter lay-up

Additional measures are required if laying up the vehicle over winter:

| | Activities | Done |
|---|---|---|
| **Base vehicle** | Clean body and underbody thoroughly and spray with hot wax or protect with varnish | |
| | Fill fuel tank with winter diesel | |
| | Check antifreeze in the cooling water | |
| | Rectify damage to the paintwork | |
| | Fill in washer fluid with frost protection | |
| **Body** | Clean vehicle from outside thoroughly | |
| | Keep the forced ventilation open | |
| | Clean and grease all door and flap hinges | |
| | Brush oil or glycerine on all locking mechanisms | |
| | Treat all rubber seals with a conventional rubber care product | |
| | Use graphite dust to treat locking cylinders | |
| **Interior** | Set up the de-humidifier (granulate) | |
| | Remove cushions and mattresses from the vehicle and store them in a dry place | |
| | Air the interior every 3 weeks | |
| | Empty all cabinets and storage compartments, open flaps, doors and drawers | |
| | Thoroughly clean the interior | |
| | If there is a risk of frost, do not leave the flat screen in the vehicle | |
| **Electrical system** | Remove the starter battery and the living area battery and store them in a place protected from frost (see chapter 9) or connect the vehicle to a 240 V supply | |
| **Water system** | Clean the water system using a cleaning agent from a specialised store | |
| **Complete vehicle** | Arrange the tarpaulins in such a way that the ventilation openings are not covered, or use porous tarpaulins | |

### 12.7.3 Starting up the vehicle after a temporary lay-up or after lay-up over winter

Go through the following checklist before start-up:

| | Activities | Done |
|---|---|---|
| **Base vehicle** | Check the tyre pressure on all tyres | |
| | Check the tyre pressure of the spare wheel | |
| **Body** | Clean the pivot bearing of the entrance step | |
| | Check that the doors, windows and skylights are working properly | |
| | Check the function of all external locks | |
| | Remove the cover from the waste gas vent of the heater (if there is one) | |
| | Remove the winter cover from the refrigerator grills (if there is one) | |
| **Gas system** | Put the gas bottles in the gas bottle compartment, tie down and connect to the gas pressure regulator | |
| **Electrical system** | Connect to 240 V power supply using the external socket | |
| | Fully charge living area and starter battery<br>▷ Charge the battery for at least 20 hours after lay-up. | |
| | Connect the living area battery with the 12 V power supply (see chapter 9) | |
| | Check that the electrical system are working, e.g. interior light, socket and all installed electrical appliances | |
| **Water system** | Disinfect water pipes and water canister or water tank | |
| | Check the functionality of the operating lever for the waste water tank | |
| | Close safety/drainage valve, drain cocks and water taps | |
| | Check water system for leaks | |
| **Appliances** | Check the function of the refrigerator | |
| | Check the function of the heater/boiler | |
| | Check the function of the gas cooker | |

## Chapter overview

This chapter contains instructions about inspection and maintenance work concerning the vehicle.

The maintenance instructions address the following topics:

- replacing light bulbs
- spare parts

At the end of the chapter you will find important instructions on how to obtain spare parts and on our dealers and service centres.

## 13.1 Inspection work

Like any technical appliance, the vehicle must be inspected at regular intervals.

This inspection work must be carried out by qualified personnel.

Special technical knowledge, which cannot be taught within the framework of this instruction manual, is required for these tasks. Personnel possessing this technical knowledge are available for assistance at all service centres. Their experience and regular technical instruction by the factory as well as equipment and tools guarantee expert and up-to-date inspection of the vehicle.

The service centre in charge will confirm the work performed.

Have chassis inspections confirmed in the chassis manufacturer's customer service booklet.

▷ Observe the inspections indicated by the manufacturer and have them carried out at the specified intervals. The value of the vehicle is thus preserved.

▷ The confirmation of the inspection work carried out serves as valid proof in the event of damage and guarantee claims.

## 13.2 Maintenance work

As with every machine, this vehicle requires maintenance. The extent and frequency of the maintenance work required depend on conditions of operation and use. More difficult operating conditions make it necessary to service the vehicle more often.

Have the base vehicle and the appliances serviced at the intervals specified in the corresponding instruction manuals.

## 13.3 Replacing bulbs, external

▶ Bulbs and light fittings can be extremely hot. Therefore, allow lights to cool down before changing bulbs.

▶ Store bulbs in a safe place inaccessible to children.

▶ Do not use any bulb that has been dropped or which shows scratches in its glass. The bulb might burst.

▷ A new bulb should not be touched with the fingers. Use a cloth when installing the new bulb.

▷ Only use bulbs of the same type and with the correct wattage.

▷ If LEDs in lights are defect, contact an authorised dealer or service centre.

The exterior lighting is part of the base vehicle. Replacement of light bulbs is described in the instruction manual of the base vehicle.

The rear lights are not directly accessible. Fittings must be removed first so that the bulbs can be replaced.

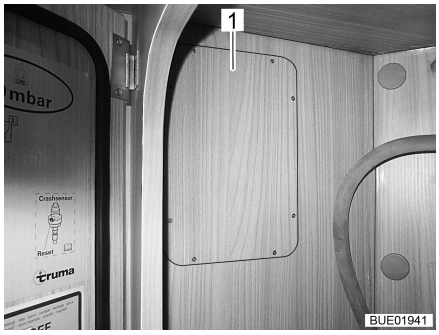


Fig. 82 Access to left hand rear lights (600)


Fig. 83 Access to left hand rear lights (640)

*Replacing left hand bulb (600):*

- Remove the cover (Fig. 82,1). The cover is fixed with cross-head screws. The cover is located in the gas bottle compartment.
- Change the bulb.

*Replacing left hand bulb (640):*

- Remove the cover (Fig. 83,1). The cover is fixed with cross-head screws.
- Grip cover (Fig. 83,2) at the grip hole and take it out.
- Change the bulb.


Fig. 84 Access to right hand rear lights

*Replacing right hand bulb:*

- Remove the cover (Fig. 84,1). The cover is fixed with cross-head screws. The cover is located in the gas bottle compartment.
- Change the bulb.

## 13.4 Lighting for living area

All of the lights in the living area are equipped with LED technology.

LED lights are economical, low-maintenance and have a very long life. It is not normally necessary to replace a light.

▷ If LEDs in lights are defect, contact an authorised dealer or service centre.

## 13.5 Spare parts

- ▶ Every alteration of the original condition of the vehicle can alter road behaviour and jeopardize road safety.
- ▶ The special equipment and original spare parts recommended by us have been specially developed and supplied for your vehicle. These products are available at the authorised dealer or service centre. The authorised dealer or service centre is informed about admissible technical details and carries out the required work correctly.
- ▶ The use of accessories, parts and fittings not supplied by us may cause damage to the vehicle and jeopardize road safety. Even if an expert's report, a general type approval or a design certification exists, there is no guarantee for the proper quality of the product.
- ▶ No liability can be assumed for damage caused by products which have not been released by us. This also applies to impermissible alterations to the vehicle.

For safety reasons, spare parts for pieces of equipment must correspond with manufacturer's instructions and be permitted by the manufacturer as a spare part. These spare parts may only be fitted by the manufacturer or an authorised specialist workshop. The authorised dealers and service centres are available for any spare parts requirement.

Here are some suggestions of important spare parts:

- Fuses
- Bulbs
- Water pump (submerged pump)

When ordering spare parts, please indicate the serial number or the chassis number and the vehicle type to the dealer.

The vehicle described in this instruction manual is built and equipped to factory standards. Special equipment is offered depending on its purpose or use. When fitting special equipment check if such equipment has to be entered in the vehicle documents. Observe the max. permissible gross weight. The authorised dealer or service centre will be happy to advise you.

## 13.6 Vehicle identification plate

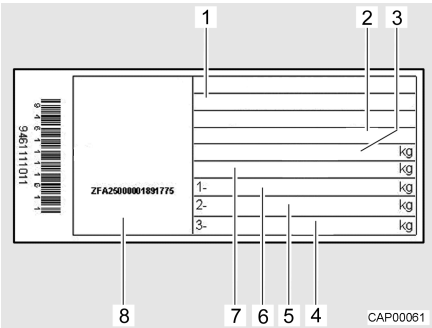


1 Type
2 Manufacturer's code and chassis number
3 Maximum permissible gross weight of the vehicle
4 Free
5 Permissible axle load rear
6 Permissible axle load front
7 Maximum permissible gross weight of the vehicle with trailer
8 Serial number

Fig. 85 Vehicle identification plate

The vehicle identification plate (Fig. 85) with the serial number is fitted on the B column on the front passenger side.

Do not remove the vehicle identification plate. The vehicle identification plate:

- Identifies the vehicle
- Helps with the procurement of spare parts
- Together with the vehicle documents identifies the vehicle owner

▷ Always include the **serial number** with all inquiries for the customer service office.

## 13.7 Warning and information stickers

There are warning and information stickers on and inside the vehicle. Warning and information stickers are for the sake of safety and must not be removed.

▷ Replacement stickers can be obtained from an authorised dealer or a service centre.

## 13.8 Dealers

Contact your authorised dealer or service centre whenever spare parts are needed for the vehicle.

You can find the addresses and telephone numbers of the authorised dealers and service centres on the web at the homepage of the manufacturer.

## 13.9 Replacement keys

To order replacement keys make a note of the following:

| Locks for: | To order keys you need: | Obtainable at: | Telephone information: |
|---|---|---|---|
| Fiat base vehicle | Chassis number | Fiat authorised workshop | – |
| Body | Serial number, chassis number, second key or key number | Dealers | – |

## Chapter overview

This chapter contains instructions regarding the tyres of the vehicle.

The instructions address the following topics:

- tyre selection
- handling of tyres
- tyre pressure

▷ The tyres are part of the base vehicle. Information regarding tyre pressure can be found in the instruction manual of the base vehicle.

▷ The vehicles are not equipped with a spare wheel. As standard, a tyre repair kit is included for inflating the flat tyre with foam.

## 14.1 General

▶ Check tyre pressure before a journey or every 2 weeks. Wrong tyre pressure causes excessive wear and can lead to damage or even to tyre burst. You can lose control of the vehicle (see section 14.5).

▷ Check the tyre pressure on cold tyres. Do not reduce the higher tyre pressure when the tyres are warm.

▷ Tubeless tyres have been installed on the vehicle. Never install tubes in these tyres.

▷ Read the instruction manual for the base vehicle.

▷ Depending on the base vehicle and model the vehicles are only equipped with tyre repair kit as standard.

▷ In the case of a puncture, pull over to the side of the road. Make vehicle safe with a hazard warning triangle. Switch on the warning lights.

▷ Tyres must not be older than 6 years as the material will become brittle over time. The four-digit DOT number (Fig. 86,1) on the tyre flank indicates the date of manufacture. The first two digits designate the week, the last two digits the year of manufacture.

Example: (3515) Week 35, year of manufacture 2015.

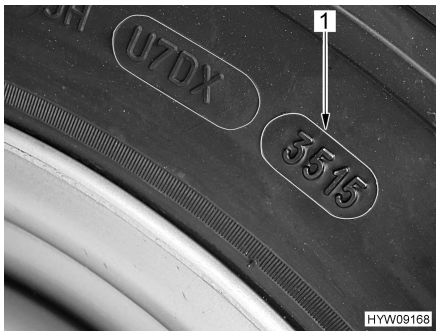


Fig. 86 DOT number

**Observe:**

- Check the tyres regularly (every 2 weeks) for equal tread wear, tread depth and external damage.
- Replace tyres at the latest, when the minimum depth of tread stipulated by law is reached.

- Always use tyres of the same model, same brand and same style (summer and winter tyres).
- Only use tyres approved for the wheel rim type fitted. The permitted rim and tyre sizes are quoted in the vehicle documents and the authorised dealer or service centre will always be glad to give you advice.
- Run-in new tyres for approx. 100 km (60 miles) at low speed since only then do they reach full strength.
- The wheels are part of the base vehicle. Information regarding the tightening torque for the wheel bolts can be found in the instruction manual of the base vehicle.

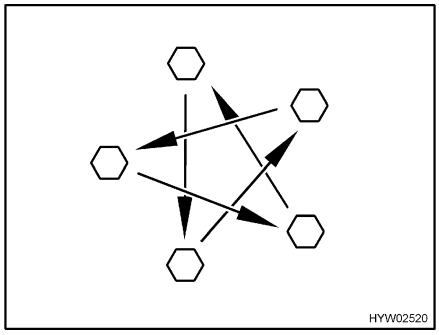


Fig. 87 Tighten the wheel nuts or wheel bolts cross-wise

- Check regularly that the wheel nuts or wheel bolts are firmly seated. Re-tighten the wheel nuts or wheel bolts of a changed wheel cross-wise (Fig. 87) after 50 km (30 miles).
- When using new or newly painted rims, re-tighten the wheel nuts or wheel bolts once again after approx. 1,000 to 5,000 km (600 miles to 3,000 miles).
- For lay-ups or long periods of inactivity, keep the tyres and tyre bearings free from pressure points:
  Jack up the vehicle so that the wheels do not bear any load, or move the vehicle every 4 weeks in such a way that the position of the wheels is changed.

## 14.2 Tyre selection

▶ A wrong tyre can damage the tyres during the journey and even cause it to burst.

▷ If tyres that are not approved for the vehicle are used, then the type approval for the vehicle and subsequently the insurance coverage can lapse. The authorised dealer or service centre will be happy to advise you.

The tyre sizes approved for the vehicle are given in the vehicle documents or can be obtained from the authorised dealers or service centres. Each tyre must fit the vehicle on which it will be driven. This applies to the external dimensions (diameter, width), which are indicated with the standardised size designations. In addition, the tyres must meet the requirements of the vehicle with regard to weight and speed.

Weight refers to the maximum permissible axle load which can be distributed on two tyres. The maximum load-carrying capacity of a tyre is indicated by its load index (= LI, load index code).

The axle geometry of a vehicle, such as wheel camber and track, is also important for tyre selection. The maximum permissible speed for a tyre (with full load-carrying capacity) is indicated by the speed index (= SI). Together, load index and speed index form the operating code of a tyre. This is an official component of the complete, standardised dimensions description which appears on every tyre. The information on the tyres must correspond to the specifications which appear in the vehicle papers.

## 14.3 Tyre specifications

**215/70 R 15C 109/107 Q (example)**

| Description | Explanation |
|---|---|
| 215 | Tyre width in mm |
| 70 | Height-to-width proportion in percent |
| R | Tyre design (R = radial) |
| 15 | Rim diameter in inches |
| C | Commercial (transporter) |
| 109 | Load index code for single tyres |
| 107 | Load index code for twin tyres |
| Q | Speed index (Q = 160 km/h) |

## 14.4 Handling of tyres

- Drive over kerbs at an obtuse angle. Otherwise the flanks of the tyres may get pinched. Driving over a kerb at a sharp angle can damage the tyre and result in it getting ruptured.
- Drive over high manhole covers at a slow speed. Otherwise the tyres may get pinched. Driving over a high manhole cover at high speed can damage the tyre and result in it getting ruptured.
- Check the shock absorbers regularly. Driving with poor shock absorbers significantly increases wear.
- If the tread wear is uneven, have the toe-in and the wheel camber checked. Driving with an incorrectly set toe-in or a one-sided wheel camber leads to a significant increase in wear.
- Do not clean the tyres with a high-pressure cleaner. The tyres can suffer serious damage within just a few seconds and rupture as a result.
- Drive in such a way as to protect your tyres. Avoid braking sharply, revving up too strongly and long journeys on poor roads.

## 14.5 Tyre pressure

- ▶ Tyres overheat if the tyre pressure is too low. This can cause serious tyre damage.
- ▶ Check tyre pressure before a journey or every 2 weeks. Wrong tyre pressure causes excessive wear and can lead to damage or even to tyre burst. You can lose control of the vehicle.
- ▶ Use only valves that are approved for the specified tyre pressure.

▷ Check the tyre pressure on cold tyres. Do not reduce the higher tyre pressure when the tyres are warm.

The payload and the durability of tyres is directly dependent on the tyre pressure. Air is a volatile medium. It is unavoidable that it will escape from tyres.

As a rule of thumb it can be assumed that a filled tyre loses pressure at a rate of 0.1 bar every two months. To prevent the tyres becoming damaged or burst, check the tyre pressure regularly.

▷ The information on pressure levels is valid for cold tyres and loaded vehicles.

▷ Pressure in hot tyres must be 0.3 bar higher than in cold tyres. Recheck the pressure when the tyres are cold.

▷ The valve used must be approved for the air pressure. We recommend the use of a metal valve for pressures greater than 4.75 bar.

▷ The tyre pressure tolerance is +/- 0.05 bar.

▷ For the maximum permissible axle loads for your vehicle please refer to specific documentation.

▷ The tyres are part of the base vehicle. Information regarding tyre pressure can be found in the instruction manual of the base vehicle.

## Chapter overview

This chapter contains instructions about possible faults in your vehicle.

The faults are listed with their possible causes and corresponding remedies.

The instructions address the following topics:

- braking system
- electrical system
- gas system
- gas cooker
- heater
- boiler
- refrigerator
- water supply
- body

The specified faults can be remedied with relative ease and without a great deal of specialised knowledge. In the event that the remedies detailed in this instruction manual should not be successful, an authorised specialist workshop must find and eliminate the cause of the fault.

## 15.1 Braking system

▶ Have defects on the braking system immediately remedied by an authorised specialist workshop.

## 15.2 Electrical system

▷ When the living area battery is changed, only use batteries of the same type and the same capacity.

▷ See chapter 9 for changing the fuses.

| Fault | Cause | Remedy |
|---|---|---|
| Interior lighting does not work | LED lamp or cable defective | Contact customer service |
| | Fuse on the transformer/ rectifier is defective | Replace fuse on the transformer/rectifier |
| The electrically operated entrance step cannot be moved in or out | Fuse on the transformer/ rectifier is defective | Replace fuse on the transformer/rectifier |
| No 240 V power supply despite connection | 240 V automatic circuit breaker has triggered | Switch on the 240 V automatic circuit breaker |
| Starter or living area battery is not charged when operated in 240 V mode | Jumbo flat fuse (40 A) on the starter or living area battery is defective | Replace jumbo flat fuse (40 A) on the starter or living area battery |
| | Charger module in the transformer/rectifier is defective | Contact customer service |

| Fault | Cause | Remedy |
|---|---|---|
| Living area battery is not charged during vehicle operation | Fuse on terminal D+ of the alternator is defective | Replace fuse |
| | Disconnector relay in the transformer/rectifier is defective | Contact customer service |
| 12 V indicator lamp does not light up | 12 V power supply switched off | Switch 12 V power supply on |
| | Living area battery disconnected from the 12 V power supply | Connect the living area battery with the 12 V power supply |
| | Starter or living area battery is not charged | Charge the starter or living area battery |
| | Disconnector relay in the transformer/rectifier is defective | Contact customer service |
| 12 V power supply does not work | 12 V power supply switched off | Switch 12 V power supply on |
| | Living area battery disconnected from the 12 V power supply | Connect the living area battery with the 12 V power supply |
| | Living area battery is discharged | Charge the living area battery |
| | Jumbo flat fuse (40 A) on the living area battery is defective | Replace jumbo flat fuse (40 A) on the living area battery |
| | Disconnector relay in the transformer/rectifier is defective | Contact customer service |
| 12 V power supply does not work in 240 V operation | 12 V power supply switched off | Switch 12 V power supply on |
| | Living area battery disconnected from the 12 V power supply | Connect the living area battery with the 12 V power supply |
| | Charger module in the transformer/rectifier is defective | Contact customer service |
| | 240 V automatic circuit breaker has triggered | Contact customer service |
| | Jumbo flat fuse (40 A) on the living area battery is defective | Replace jumbo flat fuse (40 A) on the living area battery |
| Starter battery is discharged in 12 V operation | Disconnector relay in the transformer/rectifier is defective | Contact customer service |
| | Living area battery disconnected from the 12 V power supply | Connect the living area battery with the 12 V power supply |

| Fault | Cause | Remedy |
|---|---|---|
| No voltage is supplied by the living area battery | Living area battery is discharged | Charge living area battery immediately<br>▷ Total discharge damages the battery.<br>If the vehicle is to be laid up for a long period, fully charge the living area battery beforehand |
| Living area battery overloaded ("hot") | Battery selection switch set wrongly | Move position of battery selection switch |
| | Defective load sensor or relay | Remove the jumbo flat fuse on the living area battery, then contact customer service |

## 15.3 Gas system

- ▶ In case of a defect of the gas system (gas odour, high gas consumption) there is danger of explosion! Close regulator tap on the gas bottle immediately. Open doors and windows and ventilate well.
- ▶ If the gas system is defective: Do not smoke; do not ignite any open flames, and do not operate electric switches (light switches etc.). Check the tightness of gas-conducting parts and lines with leakage search spray. Do not check with an open flame.
- ▶ Have the defective gas system repaired by an authorised specialist workshop.

| Fault | Cause | Remedy |
|---|---|---|
| No gas | Gas bottle is empty | Change gas bottle |
| | Gas isolator tap closed | Open the gas isolator tap |
| | Regulator tap on the gas bottle is closed | Open regulator tap on the gas bottle |
| | External temperature is too low (-42 °C for propane gas, 0 °C for butane gas) | Wait for higher external temperatures |
| | Built-in appliance is defective | Contact customer service |

## 15.4 Cooker

| Fault | Cause | Remedy |
|---|---|---|
| Ignition fuse does not operate (flame does not burn after the control knobs are released) | Heat-up time is too short | Keep control knob pressed for approx. 15 to 20 seconds after ignition |
| | Ignition fuse is defective | Contact customer service |
| Flame extinguishes when being reduced to its minimum setting | Thermocouple sensor is incorrectly set | Correctly reset thermocouple sensor (do not bend). The sensor tip should protrude by 5 mm beyond the burner. The sensor neck should not be more than 3 mm away from the burner ring; if necessary, contact customer service |

## 15.5 Heater/boiler

In the event of a defect contact the nearest customer service workshop of the relevant appliance manufacturer. The list of addresses is enclosed with the accompanying appliance documentation. Only authorised qualified personnel may repair the appliance.

### 15.5.1 Truma heater/boiler with analogue operating unit

| Fault | Cause | Remedy |
|---|---|---|
| Heater does not ignite | Temperature sensor on operating unit or remote sensor defective | Pull out plug on operating unit. The heater then works without thermostat. Contact the customer service as soon as possible |
| Boiler empties, safety/drainage valve has opened | Internal temperature below 8 °C | Heat inside |
| Safety/drainage valve cannot be closed | Temperature at safety/drainage valve below 8 °C | Heat inside |
| Fan wheel runs noisily or not steadily | Fan wheel is soiled | Contact Truma service department |
| Fault is displayed | See flash sequence table | See flash sequence table |

**Flash sequence** In the event of an error, the LEDs flash as follows:

- On/off 0.5 seconds
- Pause 5 seconds

| Fault | Cause | Remedy |
|---|---|---|
| None of the LEDs comes on, device is switched on, operating voltage is connected | Automatic restart is blocked, e.g. following an interruption of the power supply | Reset the device (switch off, wait 5 seconds, switch on again) |
| After switching on (winter and summer operation) none of the LEDs comes on | No operating voltage | Check 12 V battery voltage, load battery if necessary |
| | | Check all electrical plug connectors |
| | Appliance fuse or vehicle fuse defective | Check appliance fuse or vehicle fuse and replace if necessary |
| After switching on, the green LED comes on but the heater does not work | The temperature set on the control unit is below room temperature | Set a higher temperature on the control unit |
| Green LED comes on, yellow LED flashes 1 x (heater still in operation) | Risk of undervoltage; battery voltage too low < 10.4 V | Charge the battery |
| Green LED comes on, yellow LED flashes 2 x (no further operation) | Undervoltage; battery voltage too low < 10.0 V | Charge battery or replace |
| | Overvoltage > 16.4 V | Check battery voltage and voltage sources (e.g. charging unit) |
| Green LED comes on, yellow LED flashes 4 x<br>After extended operation, heater registers a fault | Summer operation with empty water container | Switch off the device and allow it to cool, fill boiler with water |
| | Warm air louvres blocked | Check outlet openings |
| | Air circulation suction system blocked | Remove blocking of air circulation suction system |
| Green LED comes on, yellow LED flashes 5 x | Room temperature sensor or cable defective | Contact customer service |
| Green LED comes on, yellow LED flashes 7 x | Control unit or cable defective | Contact customer service |
| Green LED comes on, yellow LED flashes 8 x | Short circuit in heating element for frost control | Remove plug of heating element on the electronic control unit, replace the heating element |
| Green LED comes on, yellow LED flashes 9 x approximately 30 seconds after the heater is switched on | Regulator tap or gas isolator tap is closed | Open regulator tap or gas isolator tap |
| | Gas bottle is empty | Change gas bottle |
| After extended operation, heater registers a fault | Gas pressure regulator iced up | Use regulator heater (defroster) |
| | Level of butane in the gas bottle too high | Use propane gas (especially for temperatures below 10 °C, butane is not suitable for heating) |

| Fault | Cause | Remedy |
|---|---|---|
| Red LED flashes 1 to 8 times (device on) | Fault in the heater | Contact customer service |
| Green LED flashes 5 x after the heater has been switched off | Overrun is active to reduce temperature of appliance | No error; overrun switches off after approximately 5 minutes |
| After the appliance is switched on, the green and red LEDs come on | Electronics defective | Contact customer service |

If these measures do not rectify the fault, contact customer service.

## 15.6 Refrigerator

In the event of a defect contact the nearest customer service workshop of the relevant appliance manufacturer. The list of addresses is enclosed with the accompanying appliance documentation. Only authorised qualified personnel may repair the appliance.

### 15.6.1 Thetford T1000

| Fault | Cause | Remedy |
|---|---|---|
| Refrigerator is not cooling, compressor is not running at all | Battery voltage too low | Charge the battery |
| | Start delay of 1 minute (not an error) | Wait 1 minute |
| | Ambient temperature is too high | Switch refrigerator off for 1 hour; ventilate the vehicle; switch off the night mode |
| | Fuse is defective | Replace fuse on the transformer/rectifier |
| Freezer compartment does not reach freezing temperature | Ambient temperature below 16 °C | Increase temperature in the living area and/or select higher cooling level |
| Refrigerator does not cool, compressor starts but switches off immediately | Ambient temperature is too high | Switch refrigerator off for 1 hour; ventilate the vehicle; switch off the night mode |
| Refrigerator is cooling too intensely | Set cooling level is too high | Set lower cooling level |
| Operating noises higher than in night mode | Refrigerator is working in normal mode | Change to night mode (only if temperature is below 30 °C) |
| Refrigerator is not cooling, compressor is running permanently | Fault in the refrigerator | Contact customer service |

| Fault | Cause | Remedy |
|---|---|---|
| Refrigerator does not refrigerate sufficiently | Ambient temperature is too high | Switch refrigerator off for 1 hour; ventilate the vehicle; switch off the night mode |
| | Ventilation opening entirely or partially obstructed | Remove obstruction |
| | Refrigerator door not closed correctly | Close refrigerator door, check gasket |
| | Vaporiser heavily iced-over (ice layer thicker than 3 mm) | Defrost vaporiser, check gasket |

### 15.6.2 Cruise 65

| Fault | Cause | Remedy |
|---|---|---|
| Red LED flashes | Fault in the refrigerator | Contact customer service |
| Refrigerator does not work | Refrigerator is turned off | Switch on refrigerator |
| | Electrical operating voltage too low or not present | Connect 240 V power supply |
| | | Let the vehicle engine run |
| | | Check fuse, replace if necessary |
| | | Contact customer service |
| | Thermostat defective | Contact customer service |
| | Electronic control defective | Contact customer service |
| Compressor does not run | No supply voltage | Charge the battery |
| | | Contact customer service if necessary |
| | Battery voltage too low | Charge the battery |
| | Battery capacity too low | Change the battery |
| | Ambient temperature is too high | If possible, ensure a lower ambient temperature (e.g. park the vehicle in the shade) |
| | Ventilation insufficient | Keep the ventilation slots clear |
| | | Contact customer service if necessary |
| Compressor is running continuously | Thermostat defective | Contact customer service |

| Fault | Cause | Remedy |
|---|---|---|
| Refrigerator does not cool properly although the compressor runs for a long time | Ambient temperature is too high | Improve ventilation |
| | Too much ice on the cooling fins | Defrost the refrigerator |
| | Fan is defective | Contact customer service |
| | Door does not close properly | Check door and seal; if necessary, contact customer service |
| Cooling power decreases, internal temperature increases | Ambient temperatures are too high | If possible, ensure a lower ambient temperature (e.g. park the vehicle in the shade) |
| | Ventilation insufficient | Keep the ventilation slots clear |
| | | Contact customer service if necessary |
| | Battery capacity low | Charge the battery |
| Refrigerator cools to very low temperatures, even though only cooling level "1" is set | Large amount of food put into the freezer compartment for freezing | _ [1] |
| Interior lighting does not work | Refrigerator is turned off | Switch on refrigerator |
| | Bulb is defective | Changing the bulb |
| Operating noises too loud | Nearby furniture vibrates | Check the attachment or straighten the refrigerator |
| The fuse blows | Wrong fuse | Replace fuse |
| | Electronic control defective | Contact customer service |

[1] When the food has frozen, the refrigerator automatically reduces the cooling power.

## 15.7 Water supply

| Fault | Cause | Remedy |
|---|---|---|
| Leakage water inside the vehicle | A leak has occurred | Identify leak, re-connect water pipes |
| No water | Water tank is empty | Replenish drinking water |
| | Drain cock not closed | Close drain cock |
| | 12 V power supply is switched off | Switch 12 V power supply on |
| | Fuse of the water pump is defective | Replace fuse on the transformer/rectifier |
| | Water pump defective | Exchange water pump (have it exchanged) |
| | Water pipe snapped off | Straighten water pipe or replace |
| | Transformer/rectifier defective | Contact customer service |

| Fault | Cause | Remedy |
|---|---|---|
| Toilet has no flush water | Water tank is empty | Replenish drinking water |
| Display for water and waste water indicates a wrong value | Measuring probe in the waste water or water tank is soiled | Clean water/waste water tank |
| | Measuring probe is defective | Replace measuring probe |
| Waste water tank cannot be emptied | Drain cock is clogged | Blow out the waste water tank and drainage pipe. Rinse the waste water tank well |
| Drain on the single lever mixer tap is clogged | Perlator calcified | Unclip the perlator, decalcify in vinegar water (only for products made from metal) |
| Water jets on the shower nozzle clogged | Water jets calcified | De-calcify shower nozzle in vinegar water (only for products made from metal) or rub off soft nozzle burling |
| Water drains from the shower tray slowly or does not drain at all | The vehicle is not in a horizontal position | Position the vehicle horizontally |
| Milkiness of the water | Tank filled with dirty water | Clean water tank mechanically and chemically; then disinfect and rinse copiously with drinking water |
| | Residues in the water tank or water system | Clean water system mechanically and chemically; then disinfect and rinse copiously with drinking water |
| Any change in the taste or odour of the water | Tank filled with dirty water | Clean water system mechanically and chemically; then disinfect and rinse copiously with drinking water |
| | Fuel filled into the water tank by mistake | Clean water system mechanically and chemically; then disinfect and rinse copiously with drinking water. If not successful: Contact a specialist workshop |
| | Microbiological deposits in the water system | Clean water system mechanically and chemically; then disinfect and rinse copiously with drinking water |
| Deposits in the water tank and/or water-carrying components | Water excessively long in the water tank and in water-carrying components | Clean water system mechanically and chemically; then disinfect and rinse copiously with drinking water |

## 15.8 Body

| Fault | Cause | Remedy |
|---|---|---|
| Flap hinges/door hinges are difficult to operate | Flap/door hinges are not (sufficiently) lubricated | Lubricate flap hinges/ door hinges with acid-free and resin-free grease |
| Hinges/joints in the bathroom unit/toilet compartment are difficult to operate/make a grating noise | Hinges/joints are not (sufficiently) lubricated | Lubricate hinges/joints with solvent-free and acid-free grease<br>▷ Spray cans often contain solvents |
| Storage compartment hinges are difficult to operate/make a grating noise | Storage compartment hinges are not (sufficiently) lubricated | Lubricate storage compartment hinges with acid-free and resin-free grease |

▷ The authorised dealers and service centres are available for any spare parts requirement.

## A



## B



## C



## D



## E



## F

## G



## H



## I

## S



## T



## U



## V



## W